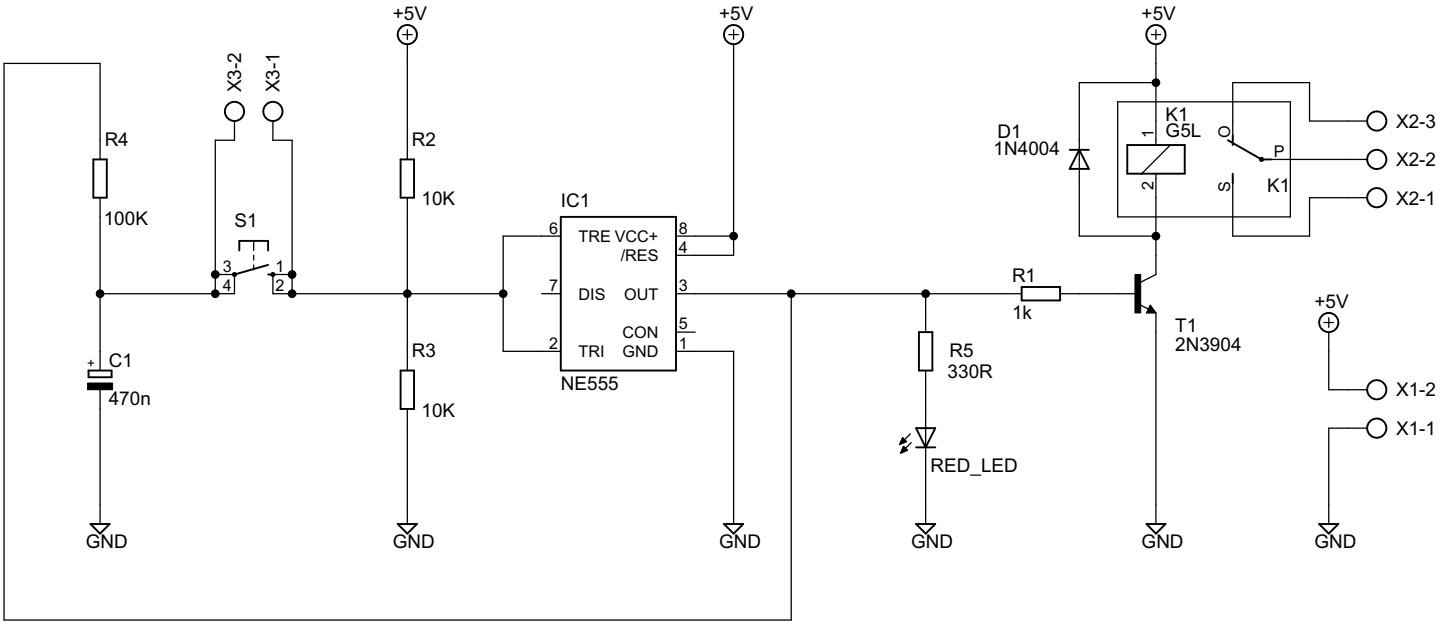
+5V
+5V
+5V
X3-2
X3-1
R4
100K
S1
R2
10K
IC1
TRE VCC+
/RES
DIS OUT
CON
TRI GND
NE555
C1
470n
R3
10K
D1
1N4004
K1
G5L
K1
X2-3
X2-2
X2-1
R1
1k
T1
2N3904
R5
330R
RED_LED
+5V
X1-2
X1-1
GND
GND
GND
GND
GND
GND