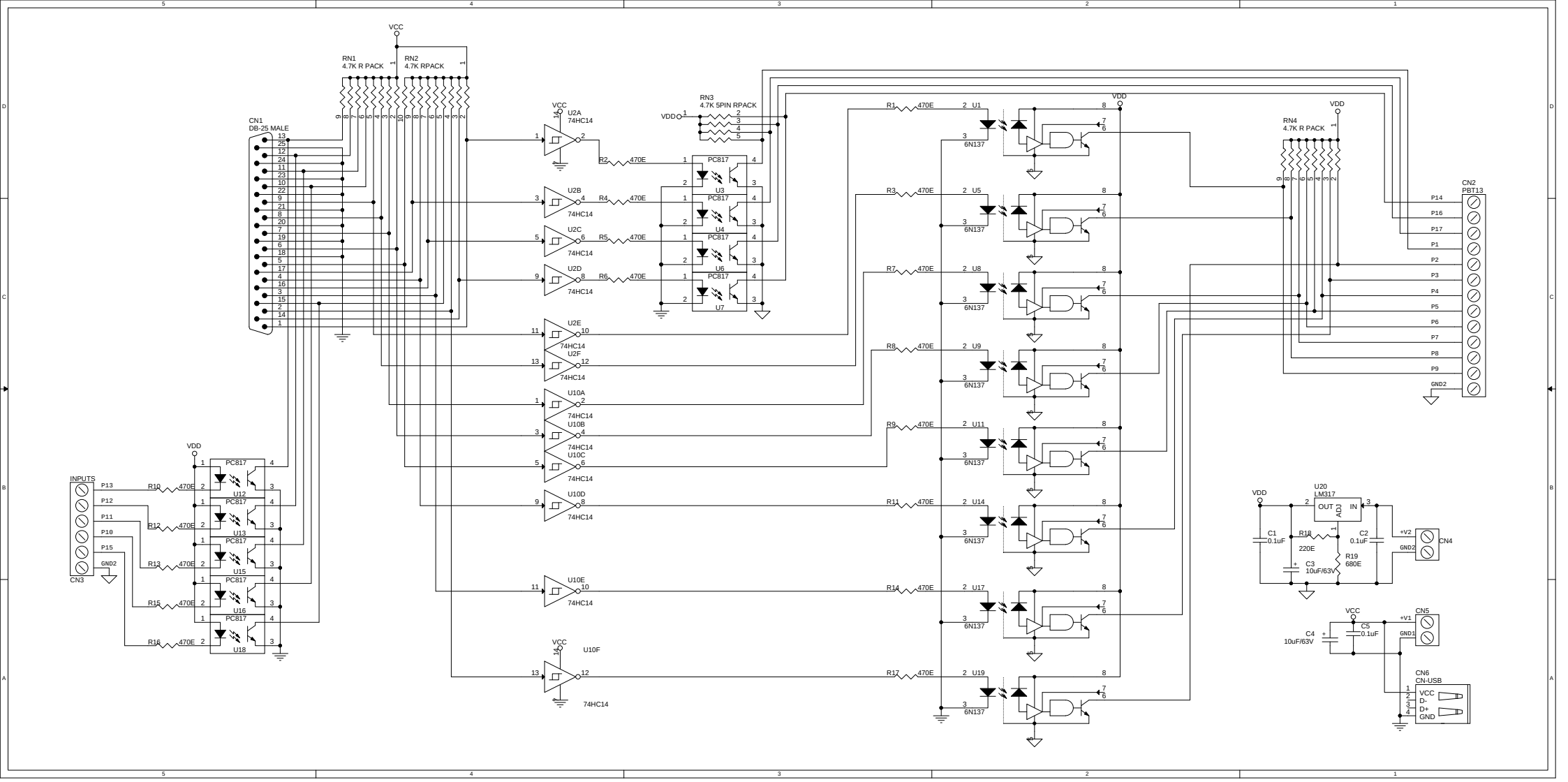
VCC
RN1
4.7K R PACK
RN2
4.7K RPACK
CN1
DB-25 MALE
U2A
74HC14
U2B
74HC14
U2C
74HC14
U2D
74HC14
U2E
74HC14
U2F
74HC14
U10A
74HC14
U10B
74HC14
U10C
74HC14
U10D
74HC14
U10E
74HC14
U10F
74HC14
RN3
4.7K 5PIN RPACK
VDD
PC817
U3
U4
U6
U7
R1
R2
R3
R4
R5
R6
R7
R8
R9
R10
R11
R12
R13
R14
R15
R16
R17
470E
6N137
U1
U5
U8
U9
U11
U14
U17
U19
RN4
4.7K R PACK
CN2
PBT13
P14
P16
P17
P1
P2
P3
P4
P5
P6
P7
P8
P9
GND2
INPUTS
P13
P12
P11
P10
P15
CN3
U12
U13
U15
U16
U18
U20
LM317
OUT
ADJ
IN
C1
0.1uF
R18
220E
C2
0.1uF
C3
10uF/63V
R19
680E
+V2
CN4
C4
10uF/63V
C5
0.1uF
+V1
GND1
CN5
CN6
CN-USB
VCC
D-
D+
GND