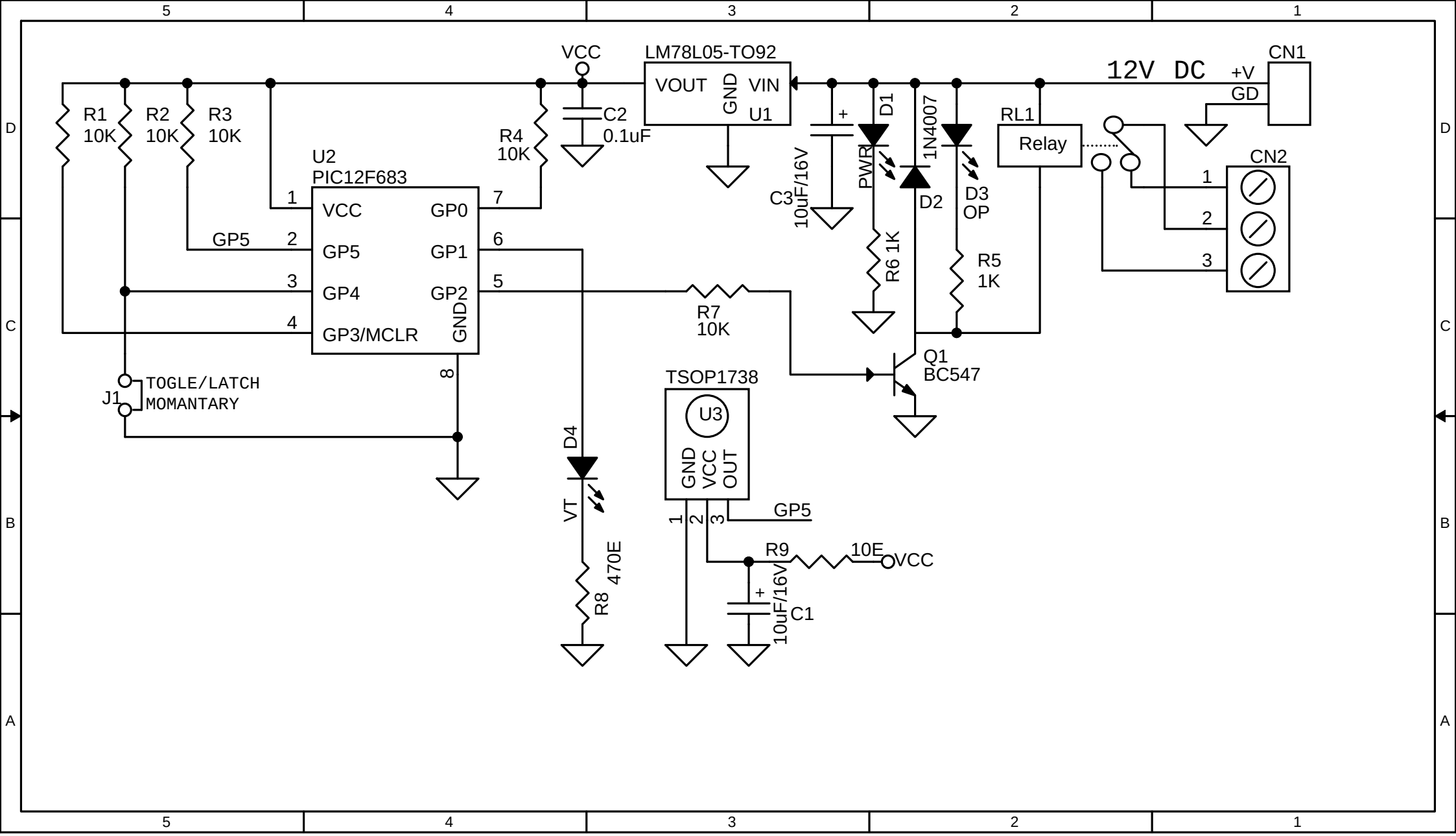
VCC
LM78L05-TO92
VOUT
GND
VIN
U1
12V DC
+V
GD
CN1
R1
10K
R2
10K
R3
10K
R4
10K
C2
0.1uF
U2
PIC12F683
VCC
GP0
GP5
GP1
GP4
GP2
GP3/MCLR
GND
GP5
C3
10uF/16V
D1
PWR
1N4007
D2
D3
OP
RL1
Relay
CN2
R6 1K
R5
1K
R7
10K
Q1
BC547
TOGLE/LATCH
MOMANTARY
J1
TSOP1738
U3
GND
VCC
OUT
D4
VT
R8
470E
GP5
R9
10E
VCC
C1
10uF/16V