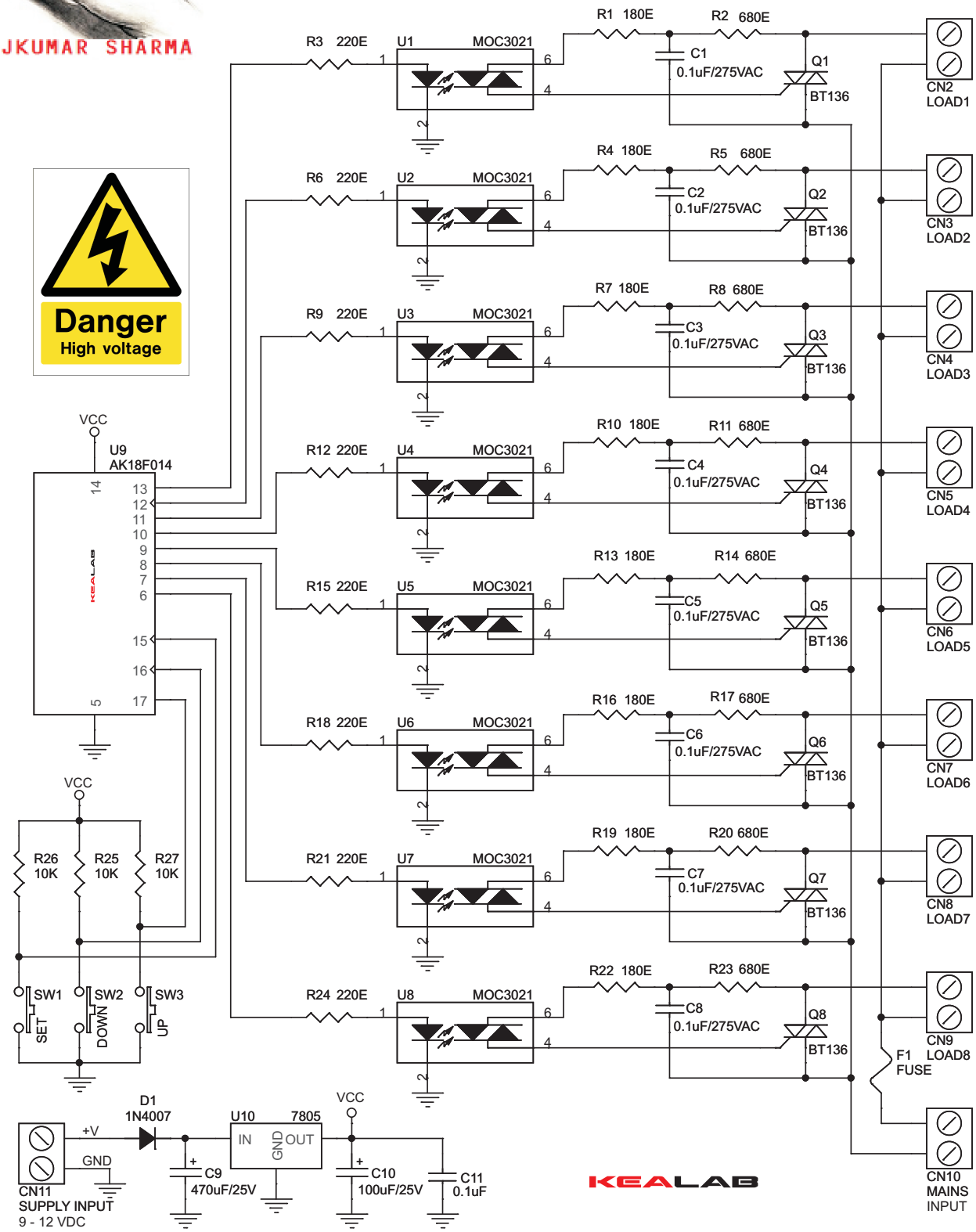This project uses 230V AC Mains supply, should not be attempted by any one without proper skill level.