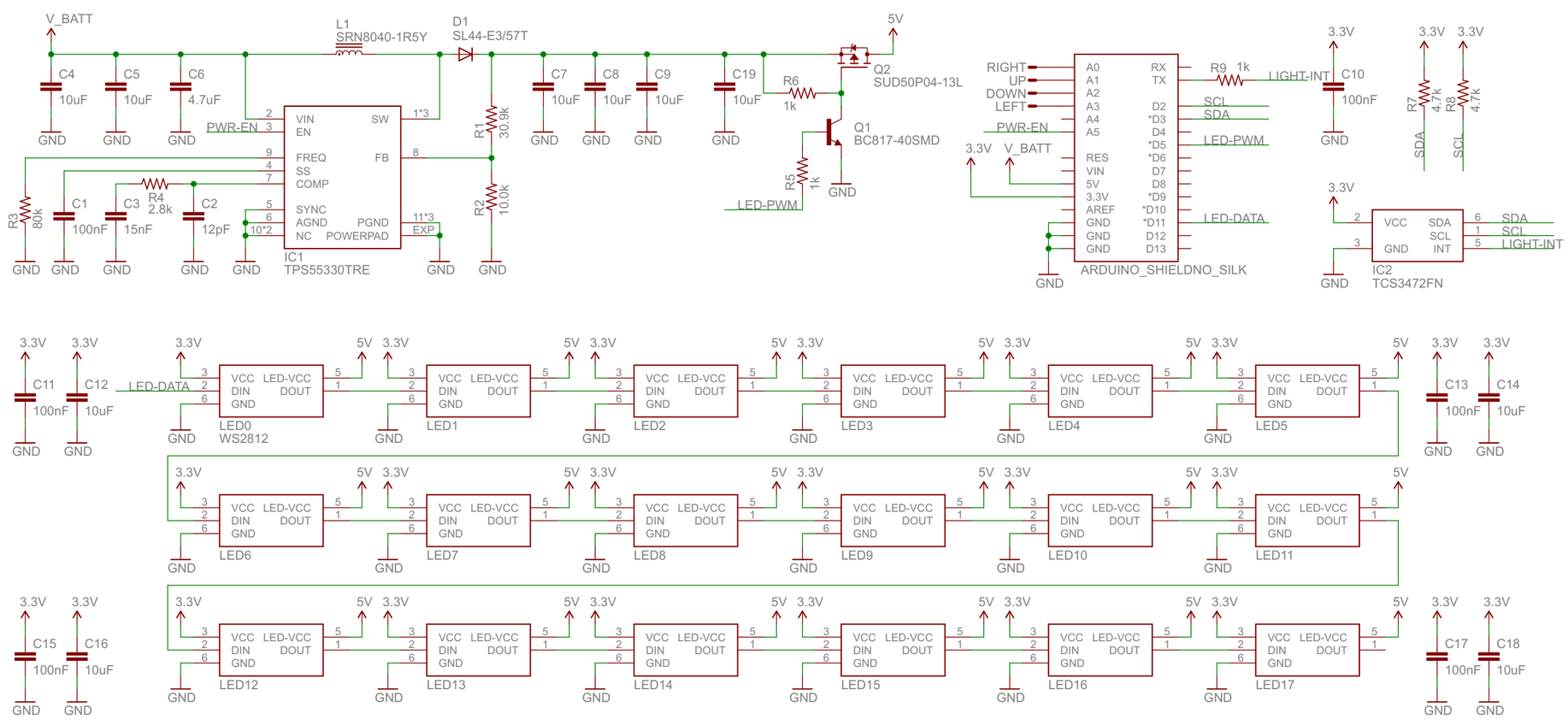
V_BATT
L1
SRN8040-1R5Y
D1
SL44-E3/57T
5V
C4
10uF
C5
10uF
C6
4.7uF
GND
PWR-EN
VIN
EN
FREQ
SS
COMP
SYNC
AGND
NC
SW
FB
PGND
POWERPAD
1*3
11*3
EXP
10*2
IC1
TPS55330TRE
R3
80k
C1
100nF
C3
15nF
R4
2.8k
C2
12pF
R1
30.9k
R2
10.0k
C7
10uF
C8
10uF
C9
10uF
C19
10uF
R6
1k
Q2
SUD50P04-13L
Q1
BC817-40SMD
R5
1k
LED-PWM
RIGHT
UP
DOWN
LEFT
3.3V
A0
A1
A2
A3
A4
A5
RES
VIN
5V
3.3V
AREF
GND
RX
TX
D2
*D3
D4
*D5
*D6
D7
D8
*D9
*D10
*D11
D12
D13
ARDUINO_SHIELDNO_SILK
R9
1k
LIGHT-INT
C10
100nF
SCL
SDA
LED-DATA
R7
4.7k
R8
4.7k
VCC
SDA
SCL
GND
INT
IC2
TCS3472FN
C11
100nF
C12
10uF
C13
100nF
C14
10uF
C15
100nF
C16
10uF
C17
100nF
C18
10uF
LED-VCC
DIN
DOUT
LED0
WS2812
LED1
LED2
LED3
LED4
LED5
LED6
LED7
LED8
LED9
LED10
LED11
LED12
LED13
LED14
LED15
LED16
LED17