CLASSIC AC 230V TIMER

Classic AC 230 V Timer project can be used in all application requiring a timer of upto 3 Minutes to operate or control any AC mains load of upto 200 Watts. This project is based on the Classic 555 Timer IC, triggering a TRIAC. Input and Output is Optically Isolated.

- Supply input 12 VDC
- Mains supply input 240 VAC or 120 VAC
- Output : upto 200 Watt
- Optically isolated Input / Output
- Onboard start and reset tactile switch
- Timer On LED
- Preset adjustable and jumper selectable for range
- Power-On LED indicator
- Screw terminal connector for easy mains supply input and load connection
- Four mounting holes of 3.2 mm each
- PCB dimensions 46 mm x 91 mm

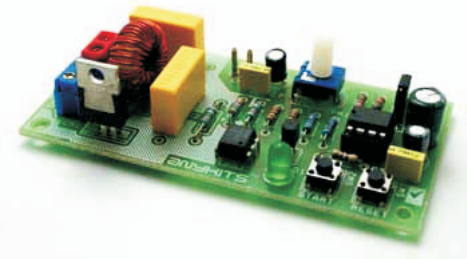

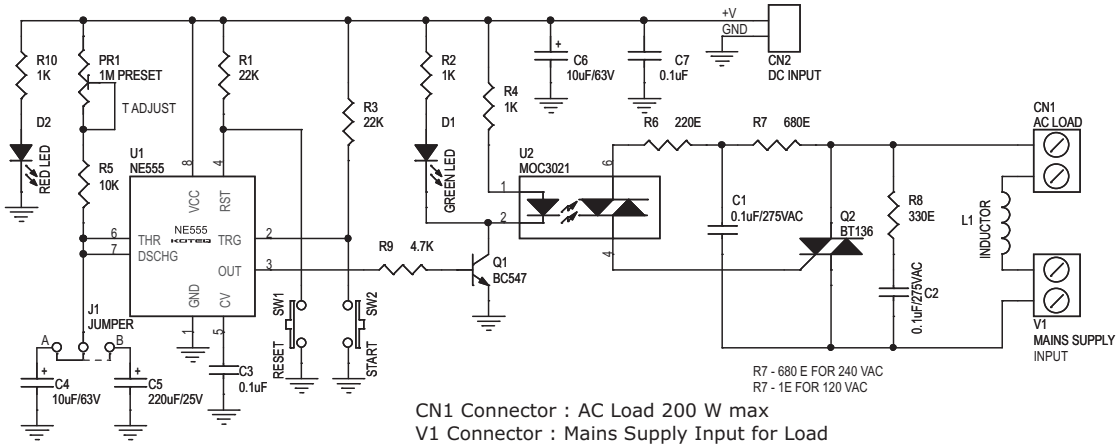

CN1 Connector : AC Load 200 W max
V1 Connector : Mains Supply Input for Load
CN2 Connector : Supply Input to circuit 6 to 12 VDC,
Current Consumption Standby 22mA, With Relay 50mA
J1 Jumper (A) : 0 to 10 Seconds
J1 Jumper (B) : 2 Sec to 3 Minutes
PR1 Preset : Time Adjust
SW1 Switch : Reset Switch
SW2 Switch : Start Switch
D2 LED : DC Supply Input Indication
D1 LED : Timer ON Indication

05005

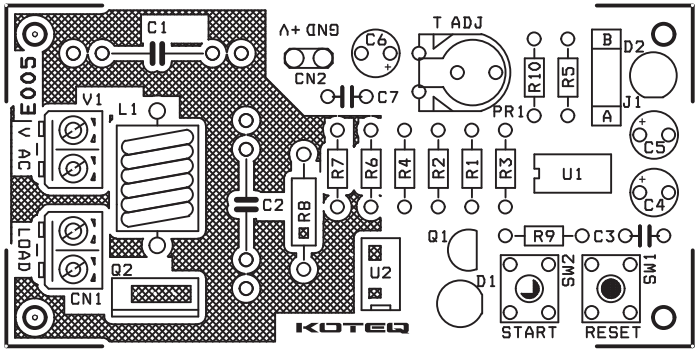

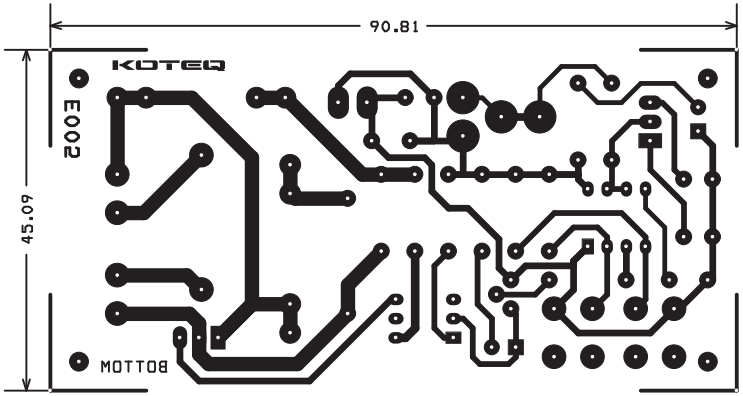

SR.	QTY.	REF.	DESCRIPTION
1	1	CN1	2 PIN SCREW TERMINAL CONNECTOR
2	1	CN2	2 PCB PINS
3	2	C1,C2	0.1uF/275VAC
4	2	C3,C7	0.1uF
5	2	C4,C6	10uF/63V
6	1	C5	220uF/25V
7	1	D1	GREEN LED
8	1	D2	RED LED
9	1	J1	3 PIN JUMPER WITH CLOSER
10	1	L1	INDUCTOR
11	1	PR1	1M PRESET
12	1	Q1	BC547
13	1	Q2	BT136
14	2	R1,R3	22K
15	3	R2,R4,R10	1K
16	1	R5	10K
17	1	R6	220E
18	1	R7	680E, 1E
19	1	R8	330E
20	1	R9	4.7K
21	2	SW1,SW2	TACT SWITCH
22	1	U1	NE555
23	1	U2	MOC3021
24	1	V1	2 PIN SCREW TERMINAL CONNECTOR
25	1	SOCKET	8 PIN DIP IC SOCKET

twovolt INDIA Copyright © 2005