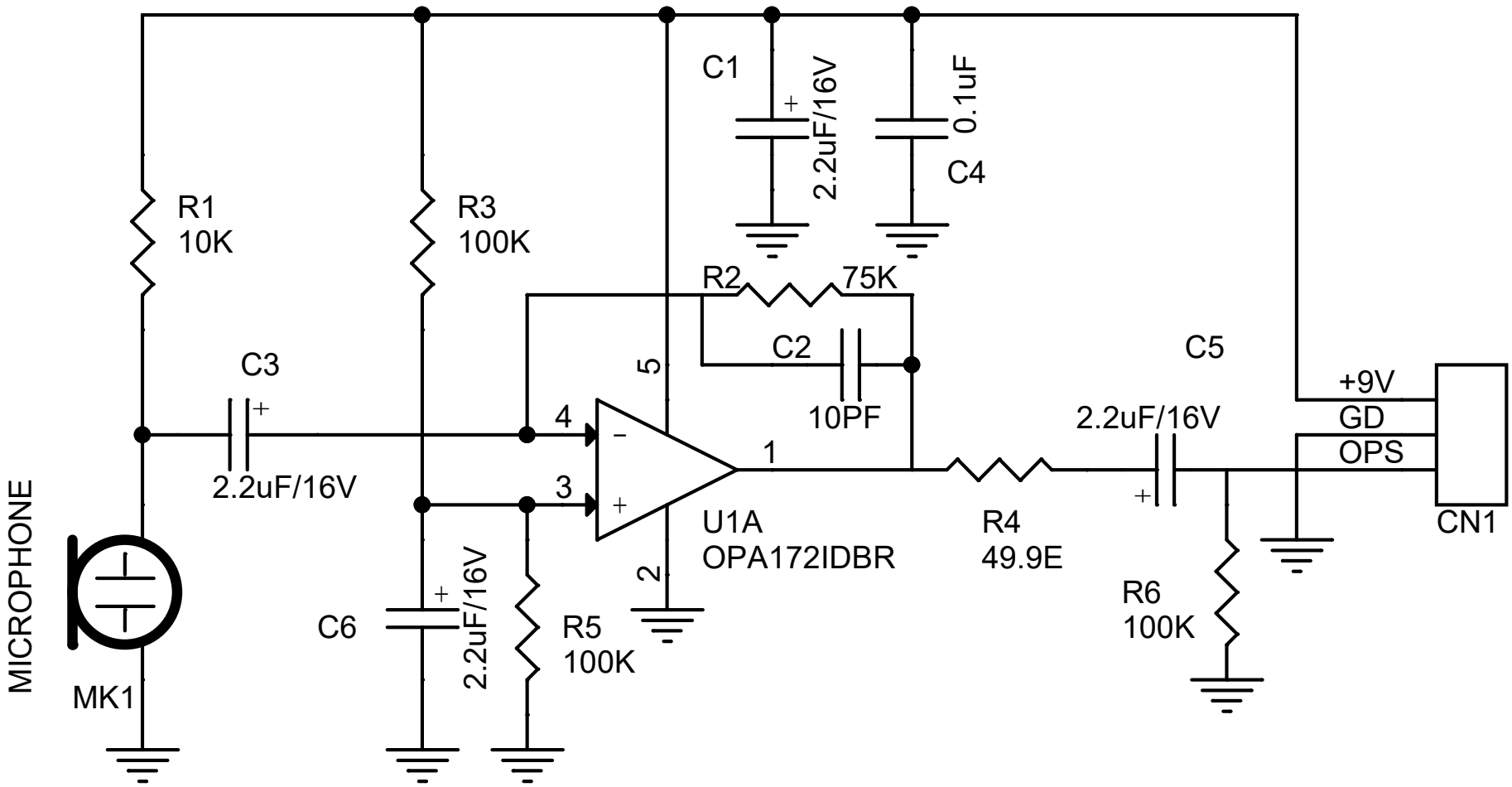
C1
2.2uF/16V
0.1uF
C4
R1
10K
R3
100K
R2
75K
C2
10PF
C5
C3
2.2uF/16V
+9V
GD
OPS
CN1
MICROPHONE
MK1
C6
2.2uF/16V
R5
100K
U1A
OPA172IDBR
R4
49.9E
R6
100K
5
4
3
2
1