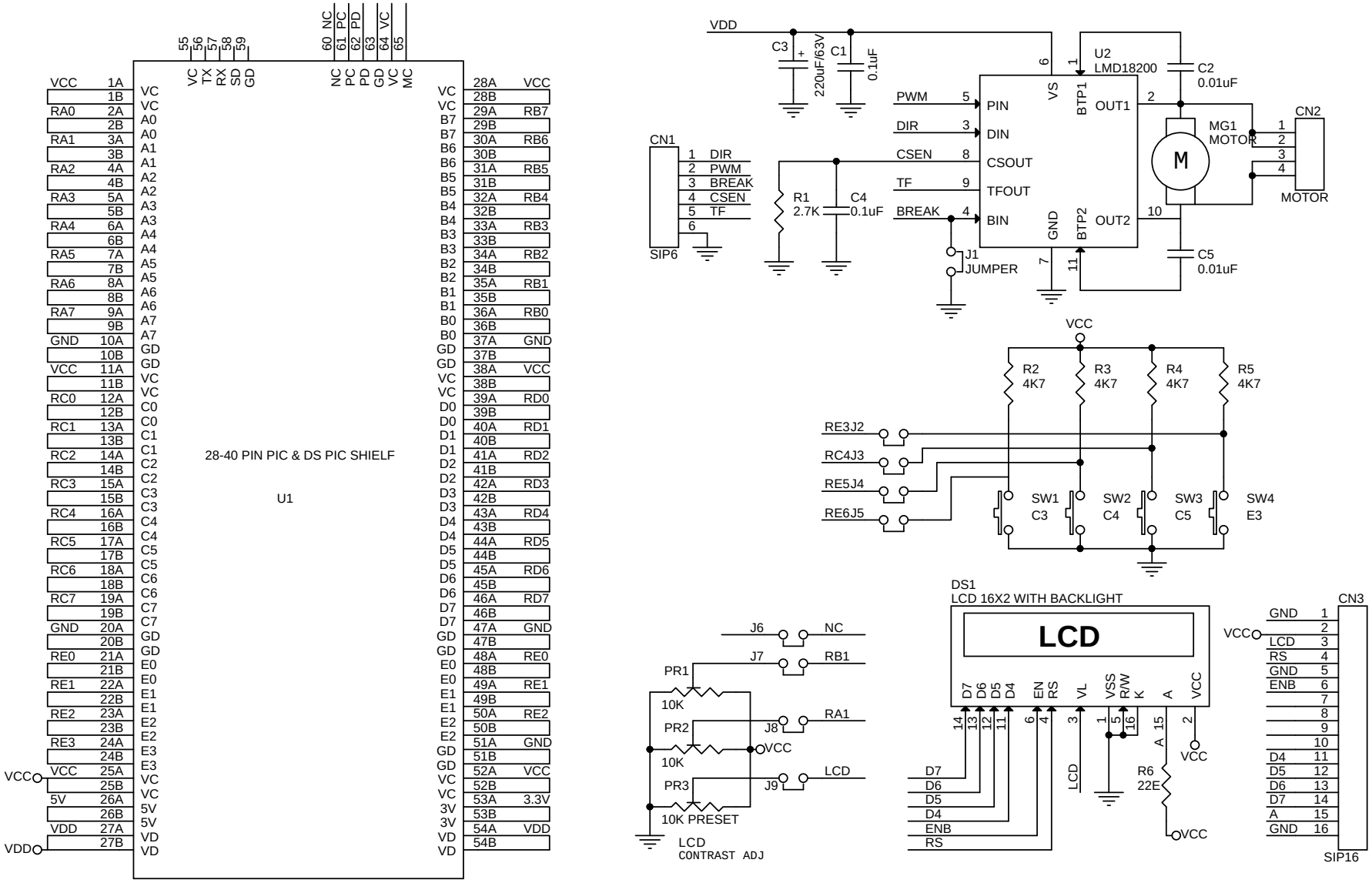
28-40 PIN PIC & DS PIC SHIELF
U1
VDD
C3
220uF/63V
C1
0.1uF
U2
LMD18200
C2
0.01uF
C5
0.01uF
PWM
DIR
CSEN
TF
BREAK
PIN
DIN
CSOUT
TFOUT
BIN
VS
GND
BTP1
BTP2
OUT1
OUT2
MG1
MOTOR
CN2
CN1
SIP6
R1
2.7K
C4
0.1uF
J1
JUMPER
VCC
R2
4K7
R3
4K7
R4
4K7
R5
4K7
RE3J2
RC4J3
RE5J4
RE6J5
SW1
C3
SW2
C4
SW3
C5
SW4
E3
DS1
LCD 16X2 WITH BACKLIGHT
LCD
CN3
SIP16
J6
NC
J7
RB1
J8
RA1
J9
LCD
PR1
10K
PR2
10K
PR3
10K PRESET
LCD
CONTRAST ADJ
R6
22E
D7
D6
D5
D4
ENB
RS