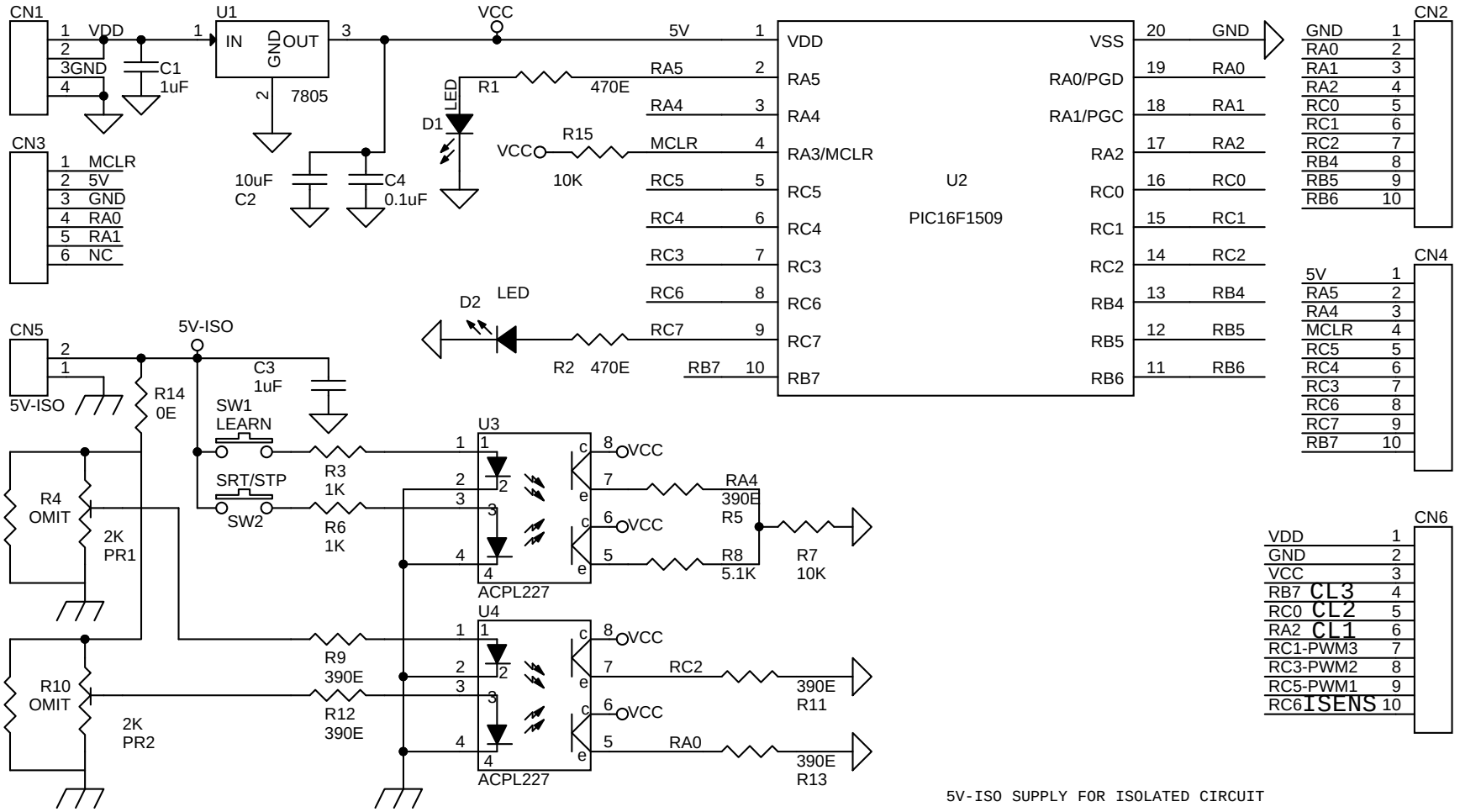
CN1
VDD
GND
C1
1uF
U1
IN
GND
OUT
7805
10uF
C2
C4
0.1uF
VCC
5V
LED
D1
R1
470E
R15
10K
CN3
MCLR
5V
GND
RA0
RA1
NC
U2
PIC16F1509
VDD
RA5
RA4
RA3/MCLR
RC5
RC4
RC3
RC6
RC7
RB7
VSS
RA0/PGD
RA1/PGC
RA2
RC0
RC1
RC2
RB4
RB5
RB6
CN2
CN4
CN5
5V-ISO
R14
0E
C3
1uF
SW1
LEARN
SRT/STP
SW2
R3
1K
R6
1K
D2
R2
470E
U3
U4
ACPL227
R4
OMIT
2K
PR1
R10
OMIT
2K
PR2
R9
390E
R12
390E
RA4
390E
R5
R8
5.1K
R7
10K
RC2
390E
R11
RA0
390E
R13
CN6
CL3
CL2
CL1
ISENS
RC1-PWM3
RC3-PWM2
RC5-PWM1
5V-ISO SUPPLY FOR ISOLATED CIRCUIT