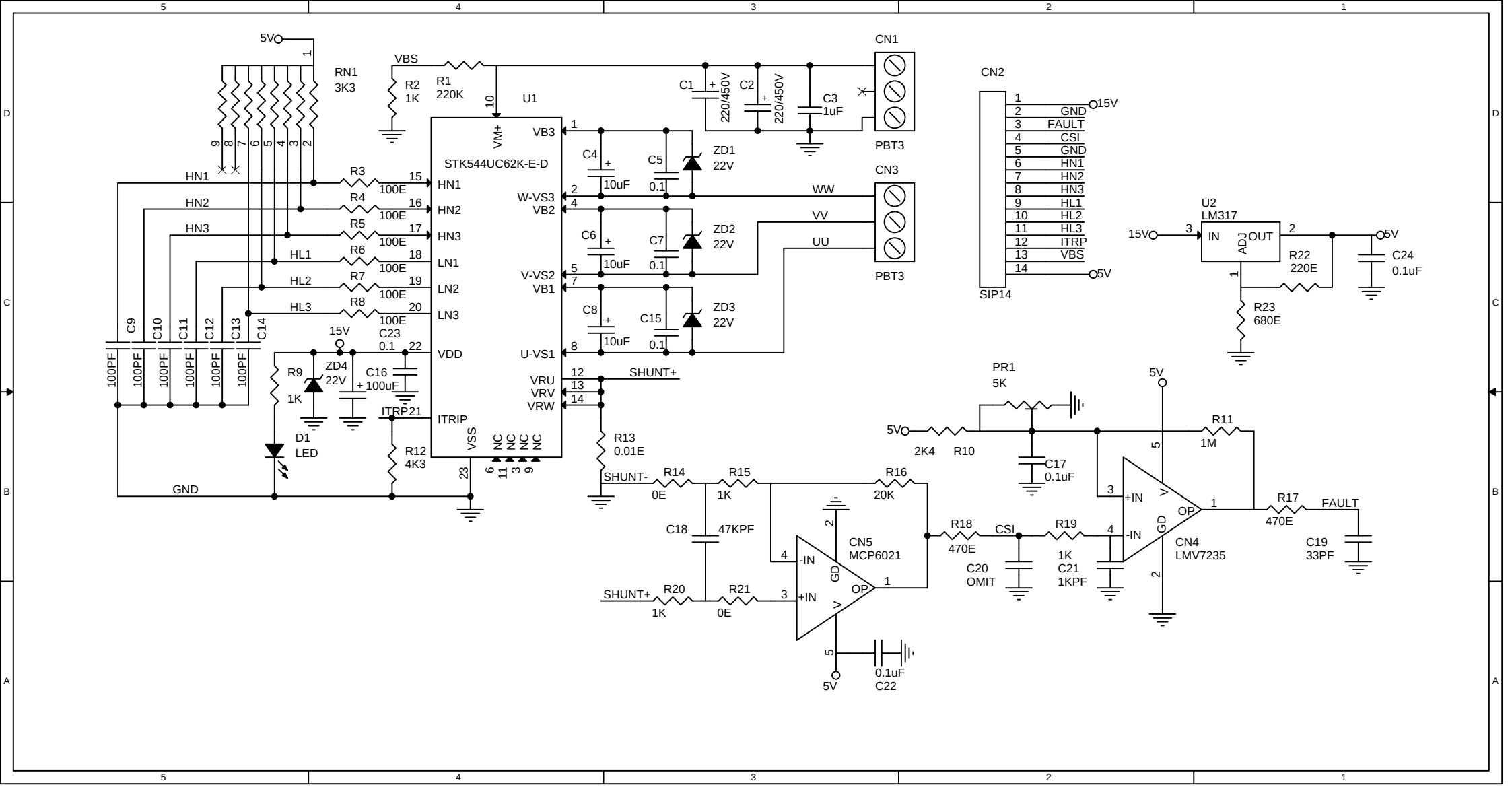
5V
RN1
3K3
VBS
R2
1K
R1
220K
U1
STK544UC62K-E-D
VM+
VB3
W-VS3
VB2
V-VS2
VB1
U-VS1
VRU
VRV
VRW
HN1
HN2
HN3
LN1
LN2
LN3
VDD
ITRIP
VSS
NC
R3
R4
R5
R6
R7
R8
100E
HL1
HL2
HL3
C1
C2
C3
220/450V
1uF
CN1
PBT3
CN3
C4
C5
C6
C7
C8
C15
10uF
0.1
ZD1
ZD2
ZD3
22V
WW
VV
UU
CN2
SIP14
GND
FAULT
CSI
15V
U2
LM317
IN
OUT
ADJ
R22
220E
R23
680E
C24
0.1uF
C9
C10
C11
C12
C13
C14
100PF
C23
C16
100uF
R9
1K
ZD4
D1
LED
R12
4K3
ITRP
SHUNT+
SHUNT-
R13
0.01E
R14
R15
R16
R17
R18
R19
R20
R21
0E
1K
20K
470E
C18
47KPF
CN5
MCP6021
-IN
+IN
OP
GD
C22
PR1
5K
2K4
R10
C17
R11
1M
CN4
LMV7235
C19
33PF
C20
OMIT
C21
1KPF