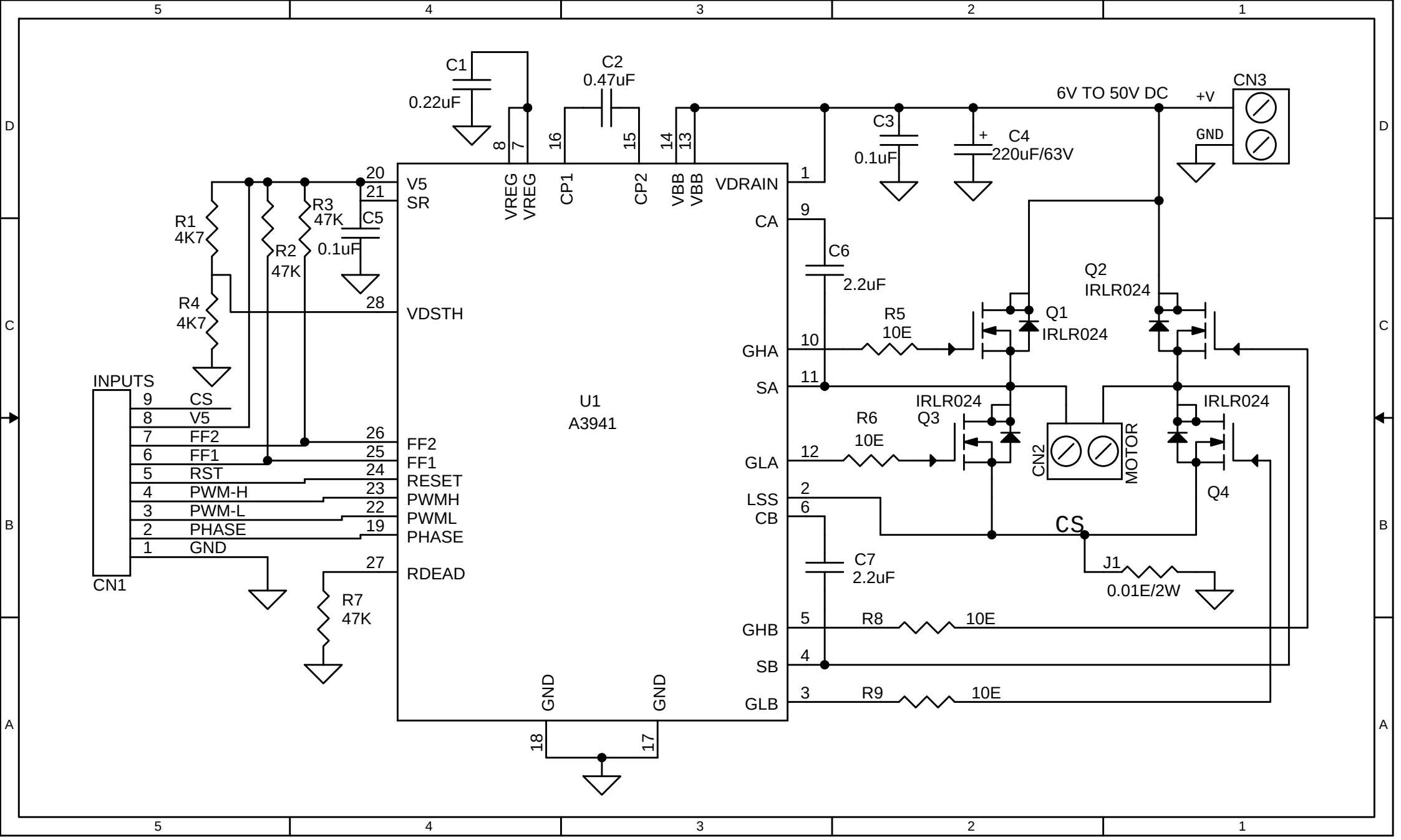
C1
0.22uF
C2
0.47uF
6V TO 50V DC
+V
CN3
GND
C3
0.1uF
C4
220uF/63V
R1
4K7
R2
47K
R3
47K
C5
0.1uF
R4
4K7
INPUTS
CN1
9 CS
8 V5
7 FF2
6 FF1
5 RST
4 PWM-H
3 PWM-L
2 PHASE
1 GND
R7
47K
U1
A3941
V5
SR
VREG
VREG
CP1
CP2
VBB
VBB
VDRAIN
CA
VDSTH
FF2
FF1
RESET
PWMH
PWML
PHASE
RDEAD
GHA
SA
GLA
LSS
CB
GHB
SB
GLB
GND
GND
C6
2.2uF
C7
2.2uF
R5
10E
R6
10E
R8
10E
R9
10E
Q1
IRLR024
Q2
IRLR024
IRLR024
Q3
IRLR024
Q4
CN2
MOTOR
CS
J1
0.01E/2W