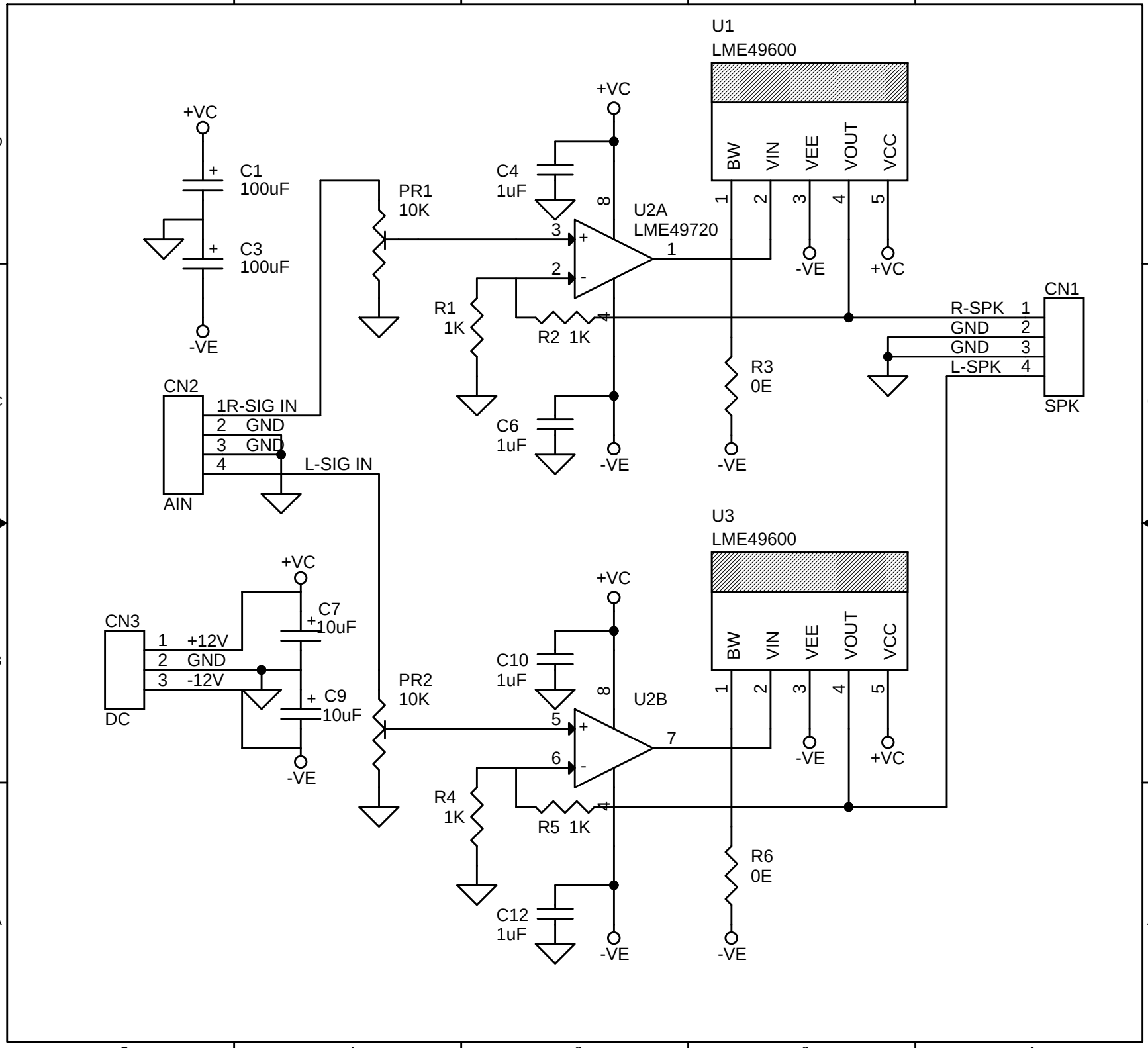
U1
LME49600
BW
VIN
VEE
VOUT
VCC
+VC
C1
100uF
C3
100uF
-VE
PR1
10K
C4
1uF
U2A
LME49720
R1
1K
R2 1K
C6
1uF
R3
0E
CN1
R-SPK
GND
GND
L-SPK
SPK
CN2
1R-SIG IN
GND
GND
L-SIG IN
AIN
U3
LME49600
CN3
+12V
GND
-12V
DC
C7
10uF
C9
10uF
PR2
10K
C10
1uF
U2B
R4
1K
R5 1K
C12
1uF
R6
0E