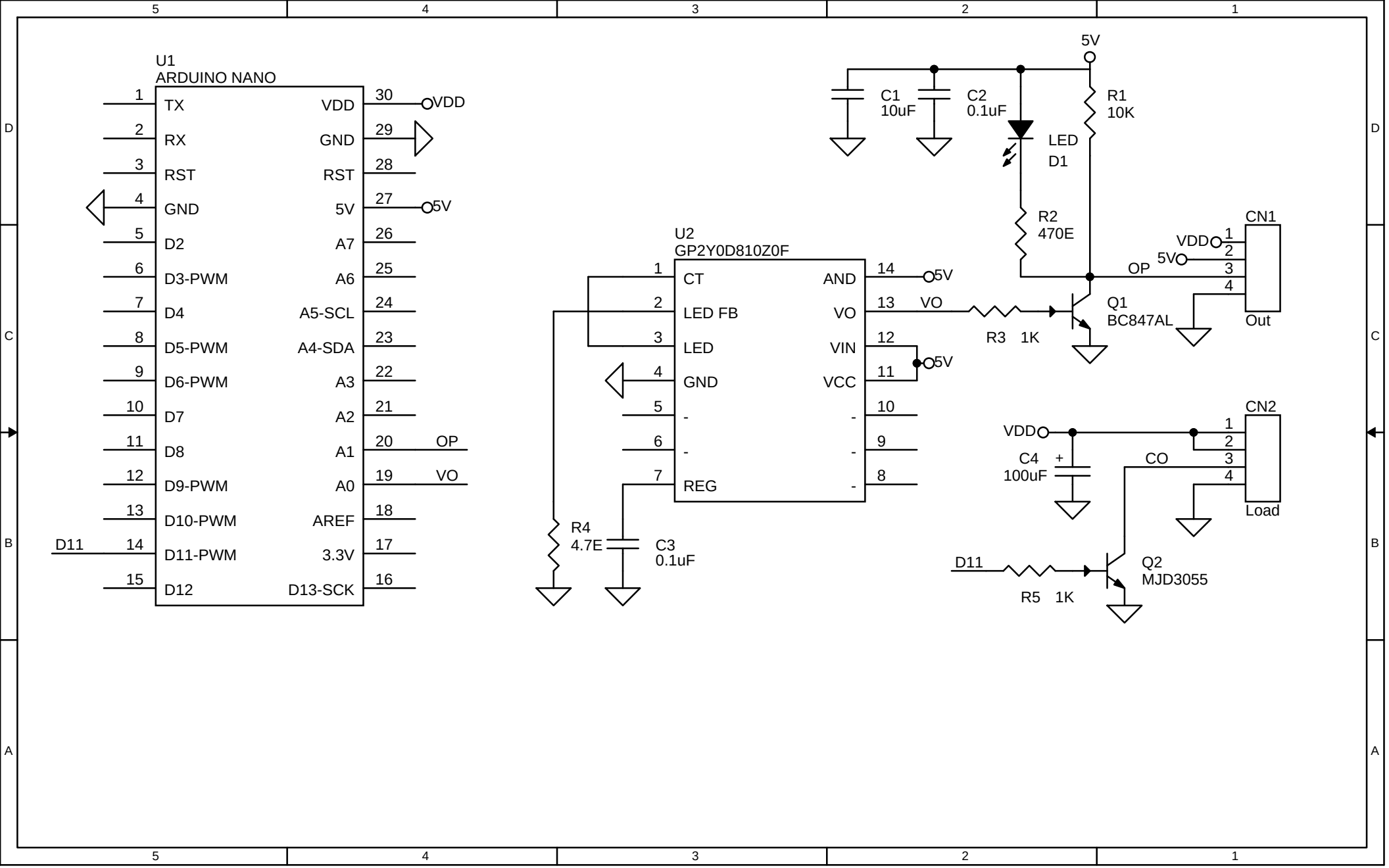
U1
ARDUINO NANO
TX
RX
RST
GND
D2
D3-PWM
D4
D5-PWM
D6-PWM
D7
D8
D9-PWM
D10-PWM
D11-PWM
D12
VDD
GND
RST
5V
A7
A6
A5-SCL
A4-SDA
A3
A2
A1
A0
AREF
3.3V
D13-SCK
VDD
5V
OP
VO
D11
U2
GP2Y0D810Z0F
CT
LED FB
LED
GND
REG
AND
VO
VIN
VCC
5V
VO
R3 1K
R4
4.7E
C3
0.1uF
C1
10uF
C2
0.1uF
LED
D1
R1
10K
R2
470E
Q1
BC847AL
CN1
Out
OP
CN2
Load
CO
C4
100uF
D11
R5 1K
Q2
MJD3055