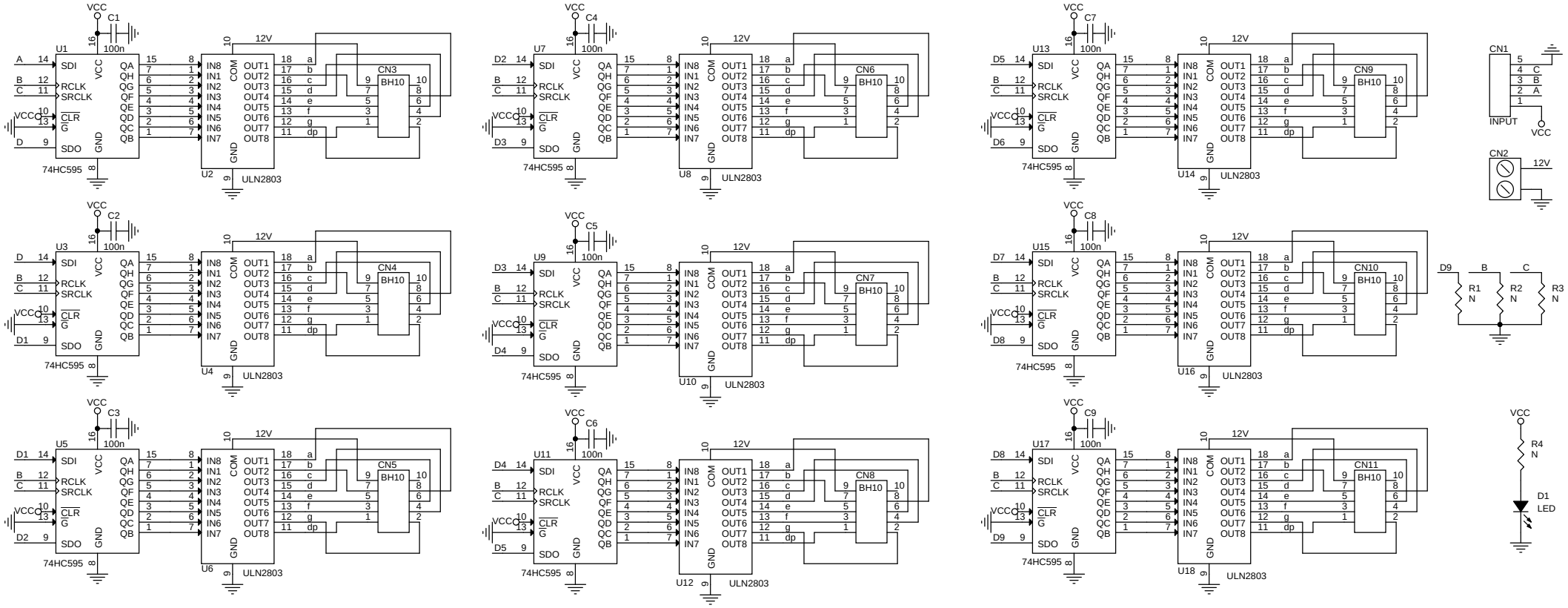
VCC
C1
100n
U1
74HC595
SDI
RCLK
SRCLK
CLR
G
SDO
QA QH QG QF QE QD QC QB
VCC
GND
A B C D
VCCO
12V
U2
ULN2803
IN8 IN1 IN2 IN3 IN4 IN5 IN6 IN7
COM
OUT1 OUT2 OUT3 OUT4 OUT5 OUT6 OUT7 OUT8
CN3
BH10
C2
U3
U4
CN4
C3
U5
U6
CN5
C4
U7
U8
CN6
C5
U9
U10
CN7
C6
U11
U12
CN8
C7
U13
U14
CN9
C8
U15
U16
CN10
C9
U17
U18
CN11
CN1
INPUT
CN2
D9
B
C
R1
N
R2
N
R3
N
R4
N
D1
LED