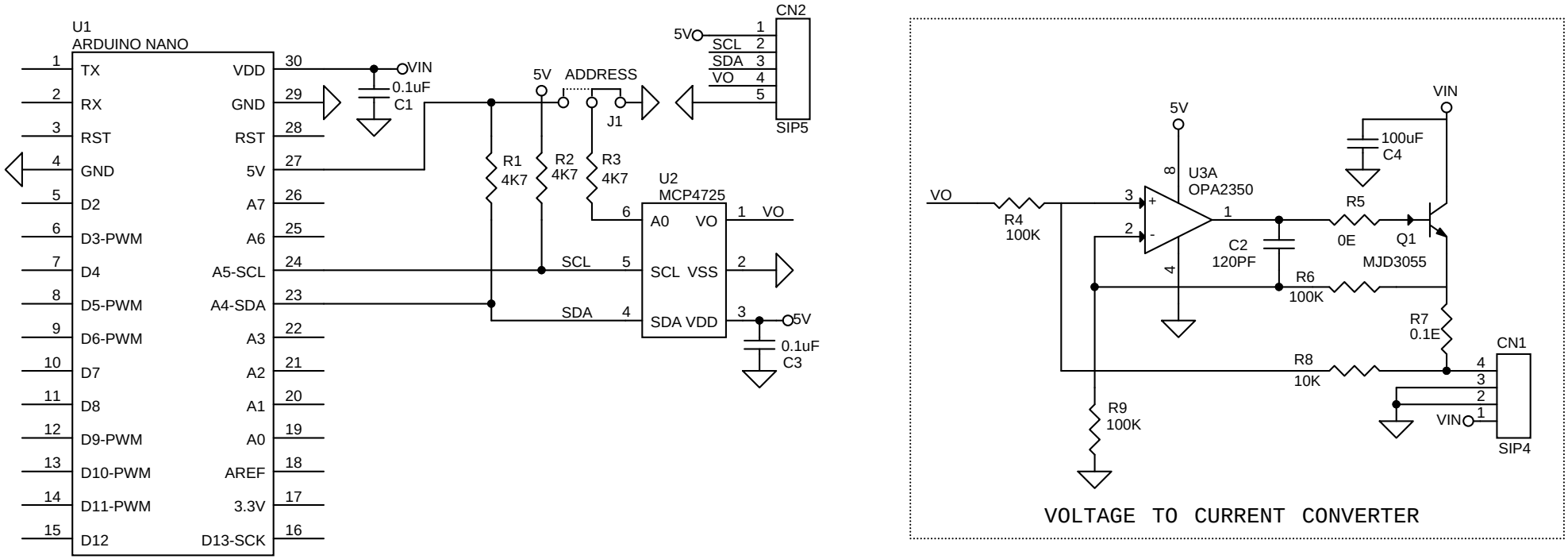
U1
ARDUINO NANO
TX
RX
RST
GND
D2
D3-PWM
D4
D5-PWM
D6-PWM
D7
D8
D9-PWM
D10-PWM
D11-PWM
D12
VDD
GND
RST
5V
A7
A6
A5-SCL
A4-SDA
A3
A2
A1
A0
AREF
3.3V
D13-SCK
VIN
0.1uF
C1
5V
ADDRESS
J1
CN2
SCL
SDA
VO
SIP5
R1
4K7
R2
4K7
R3
4K7
U2
MCP4725
A0
VO
SCL
VSS
SDA
VDD
0.1uF
C3
U3A
OPA2350
R4
100K
C2
120PF
R5
0E
Q1
MJD3055
100uF
C4
R6
100K
R7
0.1E
R8
10K
R9
100K
CN1
SIP4
VOLTAGE TO CURRENT CONVERTER