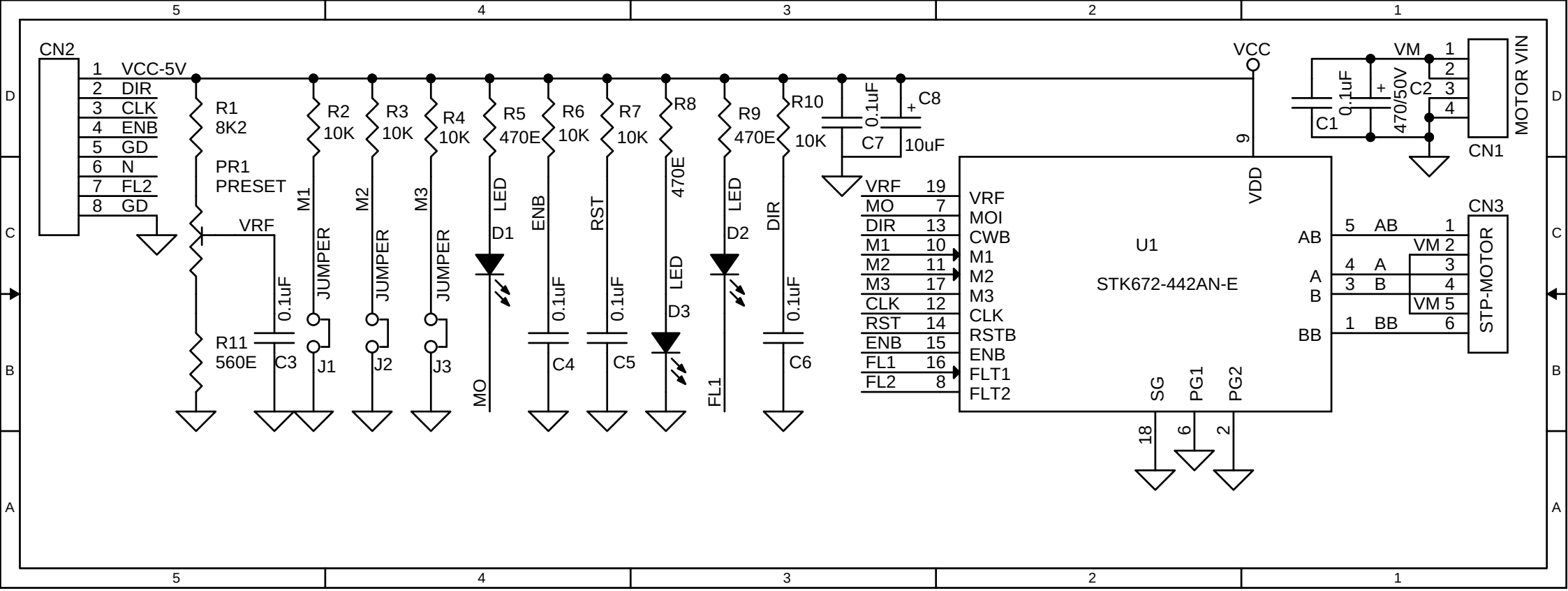
CN2
1 VCC-5V
2 DIR
3 CLK
4 ENB
5 GD
6 N
7 FL2
8 GD
R1
8K2
PR1
PRESET
VRF
R11
560E
0.1uF
C3
M1
JUMPER
J1
R2
10K
M2
JUMPER
J2
R3
10K
M3
JUMPER
J3
R4
10K
R5
470E
LED
D1
MO
R6
10K
ENB
0.1uF
C4
R7
10K
RST
0.1uF
C5
R8
470E
LED
D3
R9
470E
LED
D2
FL1
R10
10K
DIR
0.1uF
C6
0.1uF
C7
C8
10uF
VCC
9
VDD
VRF 19
MO 7
DIR 13
M1 10
M2 11
M3 17
CLK 12
RST 14
ENB 15
FL1 16
FL2 8
VRF
MOI
CWB
M1
M2
M3
CLK
RSTB
ENB
FLT1
FLT2
U1
STK672-442AN-E
AB
A
B
BB
SG
PG1
PG2
18
6
2
VM
C1
0.1uF
C2
470/50V
CN1
MOTOR VIN
5 AB
VM 2
4 A
3 B
VM 5
1 BB
CN3
STP-MOTOR