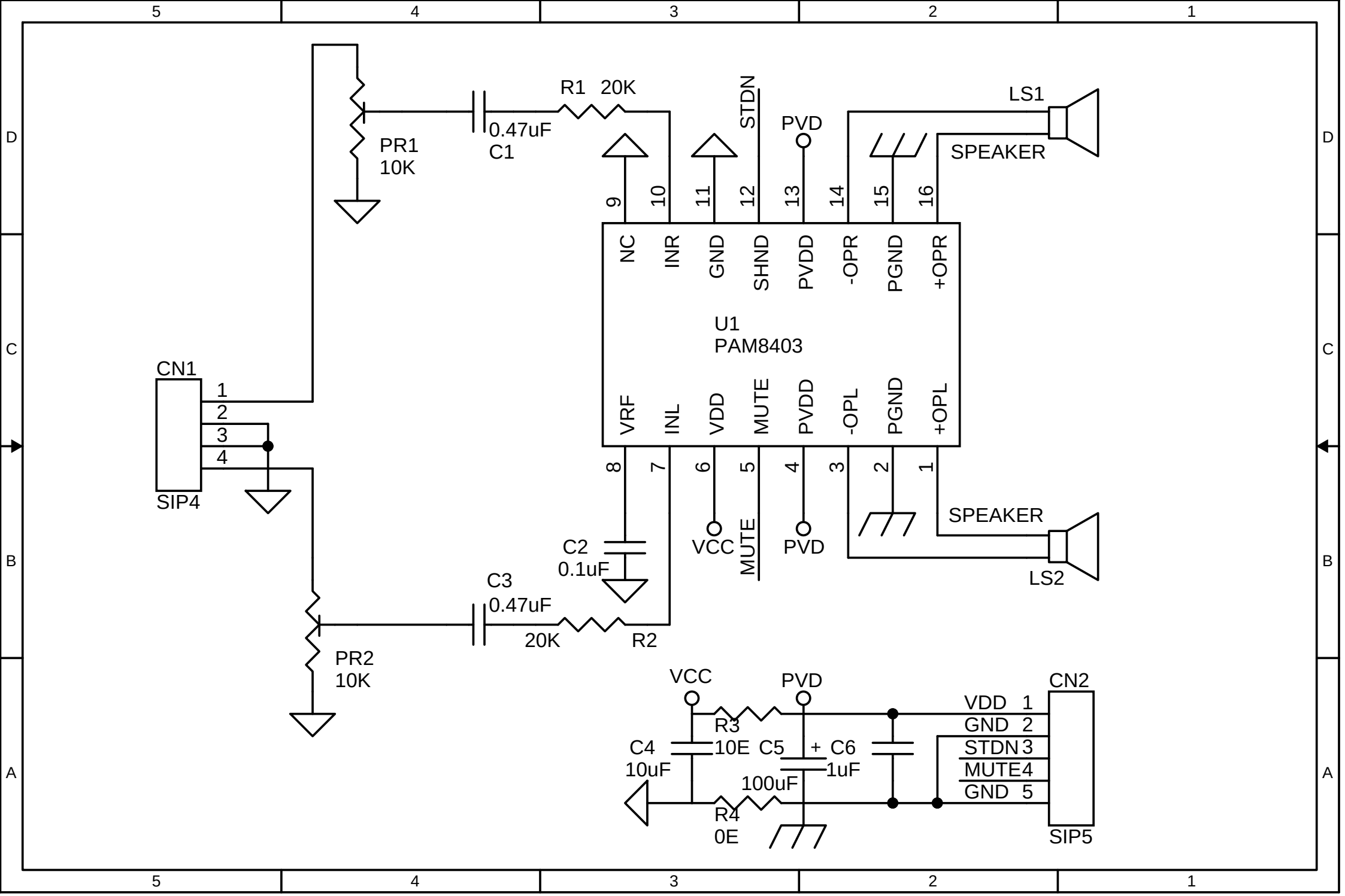
PR1
10K
0.47uF
C1
R1 20K
STDN
PVD
LS1
SPEAKER
9
10
11
12
13
14
15
16
NC
INR
GND
SHND
PVDD
-OPR
PGND
+OPR
U1
PAM8403
VRF
INL
VDD
MUTE
PVDD
-OPL
PGND
+OPL
8
7
6
5
4
3
2
1
CN1
1
2
3
4
SIP4
C2
0.1uF
VCC
MUTE
PVD
SPEAKER
LS2
C3
0.47uF
20K
R2
PR2
10K
VCC
PVD
R3
10E
C4
10uF
C5
+ C6
1uF
100uF
R4
0E
CN2
VDD 1
GND 2
STDN 3
MUTE 4
GND 5
SIP5