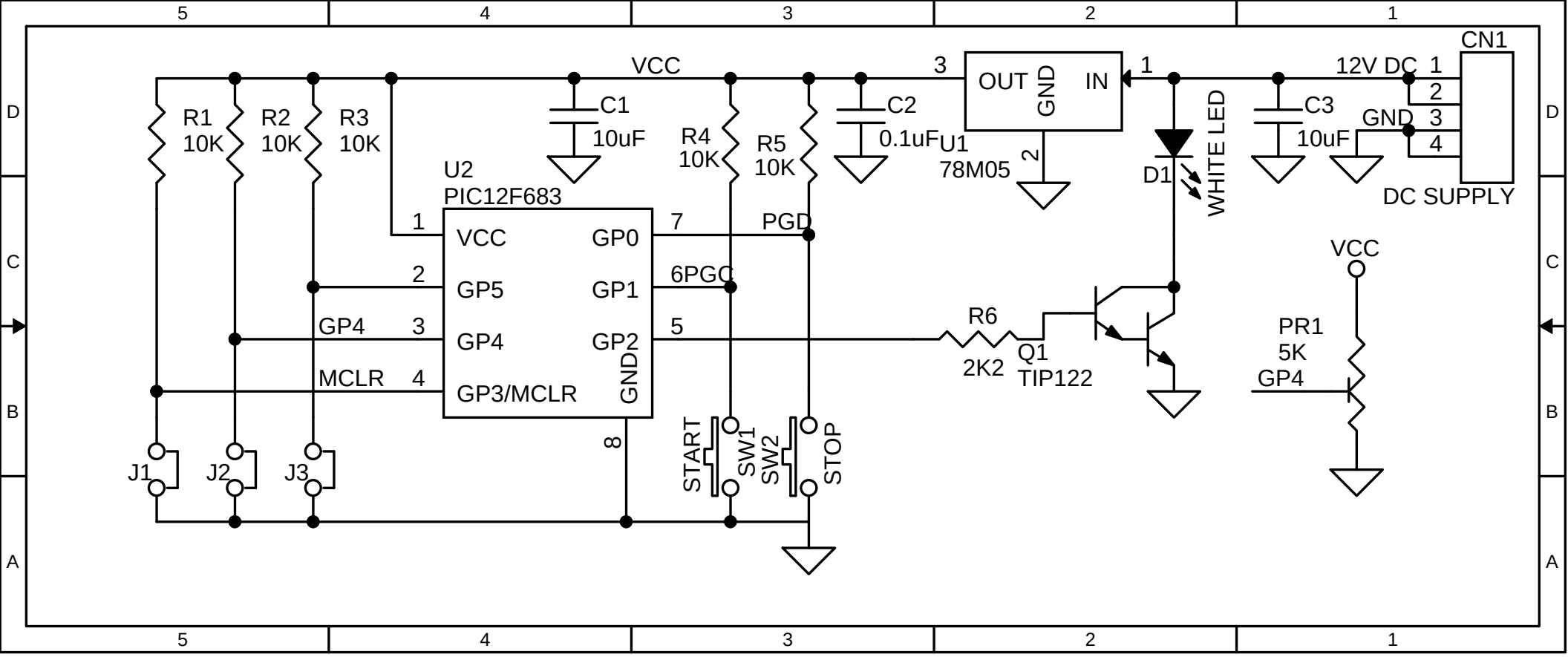
VCC
R1
10K
R2
10K
R3
10K
C1
10uF
R4
10K
R5
10K
C2
0.1uF
U1
78M05
OUT
GND
IN
3
1
2
D1
WHITE LED
C3
10uF
GND
12V DC
CN1
DC SUPPLY
U2
PIC12F683
VCC
GP0
GP5
GP1
GP4
GP2
GP3/MCLR
GND
PGD
6PGC
GP4
MCLR
R6
2K2
Q1
TIP122
PR1
5K
GP4
J1
J2
J3
START
SW1
SW2
STOP