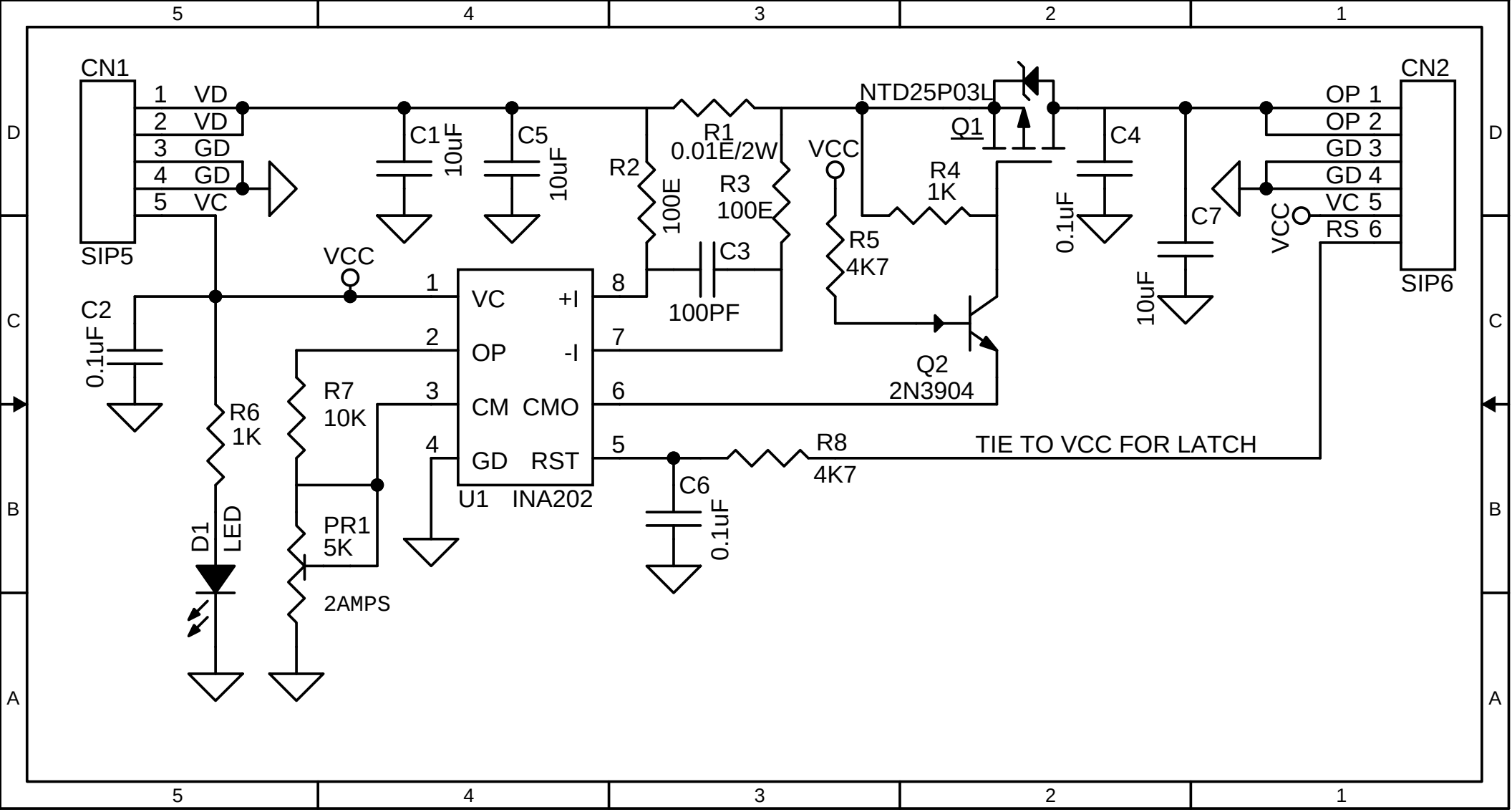
CN1
1 VD
2 VD
3 GD
4 GD
5 VC
SIP5
C1
10uF
C5
10uF
R1
0.01E/2W
R2
100E
R3
100E
C3
100PF
VCC
NTD25P03L
Q1
R4
1K
R5
4K7
Q2
2N3904
C4
0.1uF
C7
10uF
CN2
OP 1
OP 2
GD 3
GD 4
VC 5
RS 6
SIP6
VCC
C2
0.1uF
VCC
VC
OP
CM
GD
+I
-I
CMO
RST
U1 INA202
R6
1K
D1
LED
R7
10K
PR1
5K
2AMPS
C6
0.1uF
R8
4K7
TIE TO VCC FOR LATCH