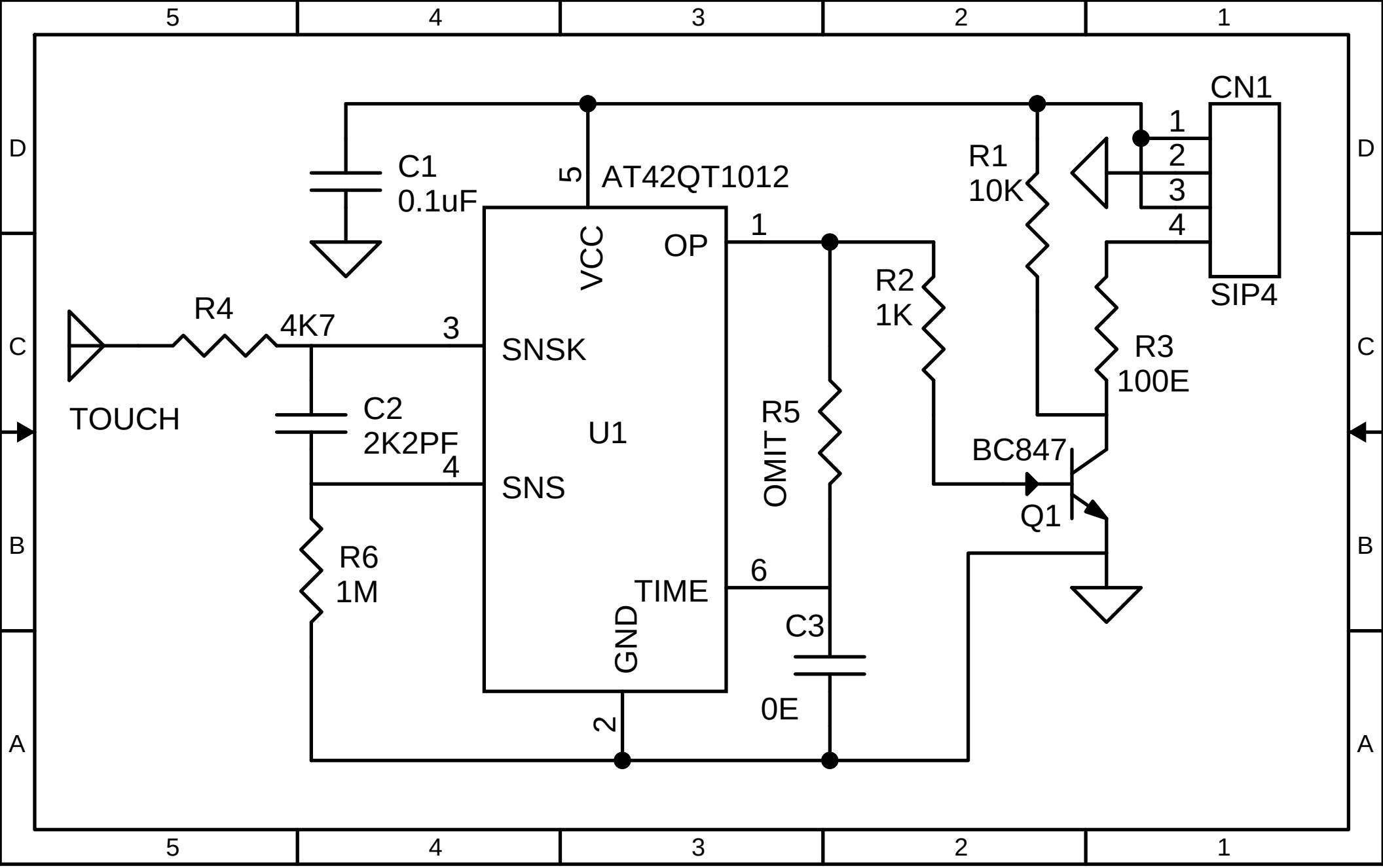
CN1
1
2
3
4
SIP4
C1
0.1uF
5
AT42QT1012
VCC
OP
1
R1
10K
R2
1K
R3
100E
R4
4K7
3
SNSK
TOUCH
C2
2K2PF
U1
R5
OMIT
BC847
4
SNS
Q1
R6
1M
6
TIME
GND
C3
0E
2