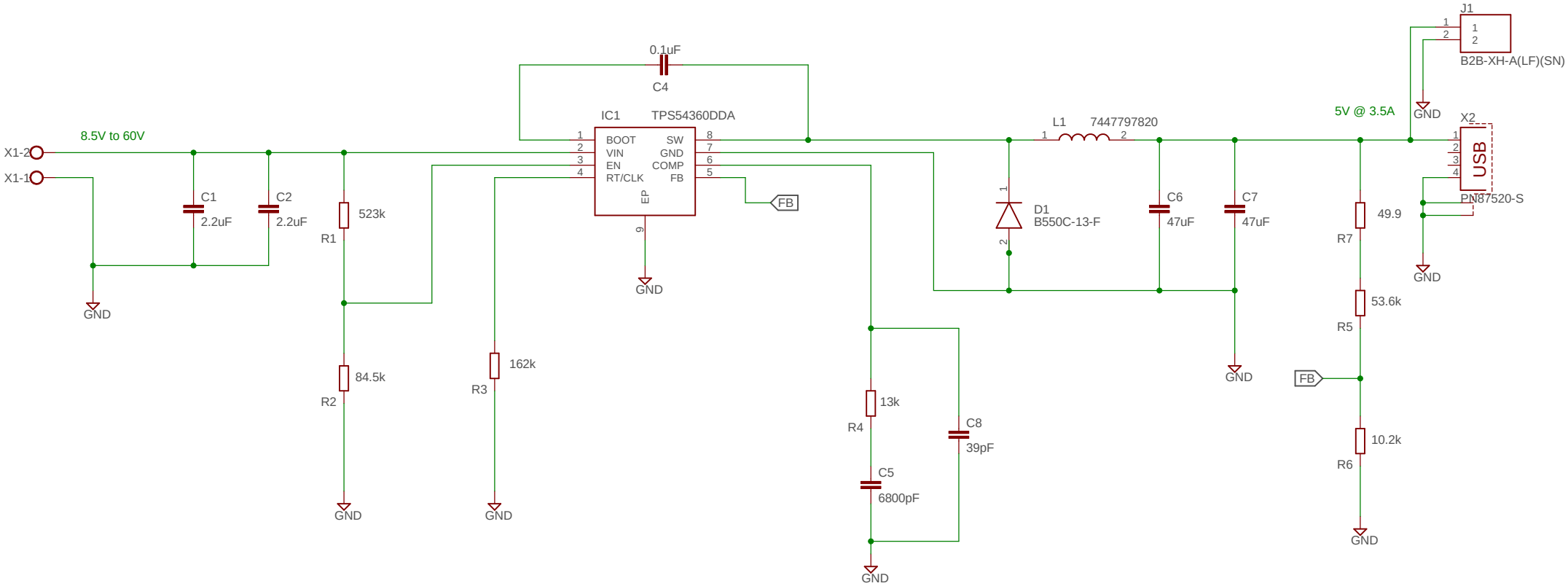
J1
B2B-XH-A(LF)(SN)
0.1uF
C4
IC1
TPS54360DDA
BOOT
VIN
EN
RT/CLK
SW
GND
COMP
FB
EP
L1
7447797820
5V @ 3.5A
X2
USB
PN87520-S
8.5V to 60V
X1-2
X1-1
C1
2.2uF
C2
2.2uF
523k
R1
84.5k
R2
162k
R3
FB
D1
B550C-13-F
C6
47uF
C7
47uF
49.9
R7
53.6k
R5
10.2k
R6
13k
R4
C8
39pF
C5
6800pF
GND