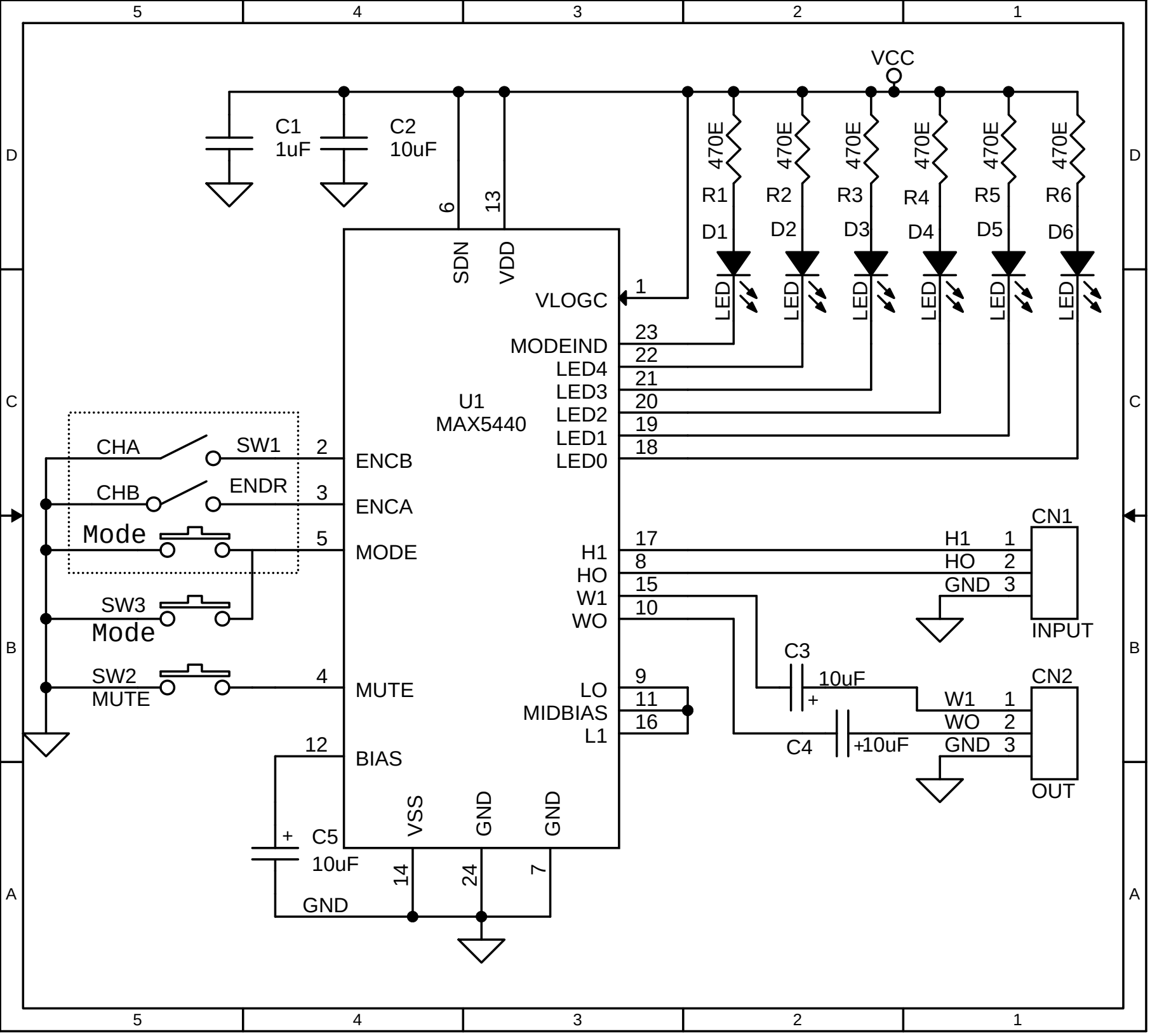
VCC
C1
1uF
C2
10uF
6
13
SDN
VDD
470E
R1
R2
R3
R4
R5
R6
D1
D2
D3
D4
D5
D6
LED
U1
MAX5440
VLOGC
1
MODEIND
23
LED4
22
LED3
21
LED2
20
LED1
19
LED0
18
CHA
SW1
2
ENCB
CHB
ENDR
3
ENCA
Mode
5
MODE
SW3
Mode
SW2
MUTE
4
MUTE
12
BIAS
H1
17
HO
8
W1
15
WO
10
LO
9
MIDBIAS
11
L1
16
VSS
GND
GND
14
24
7
C5
10uF
GND
CN1
H1 1
HO 2
GND 3
INPUT
C3
10uF
C4
+10uF
CN2
W1 1
WO 2
GND 3
OUT