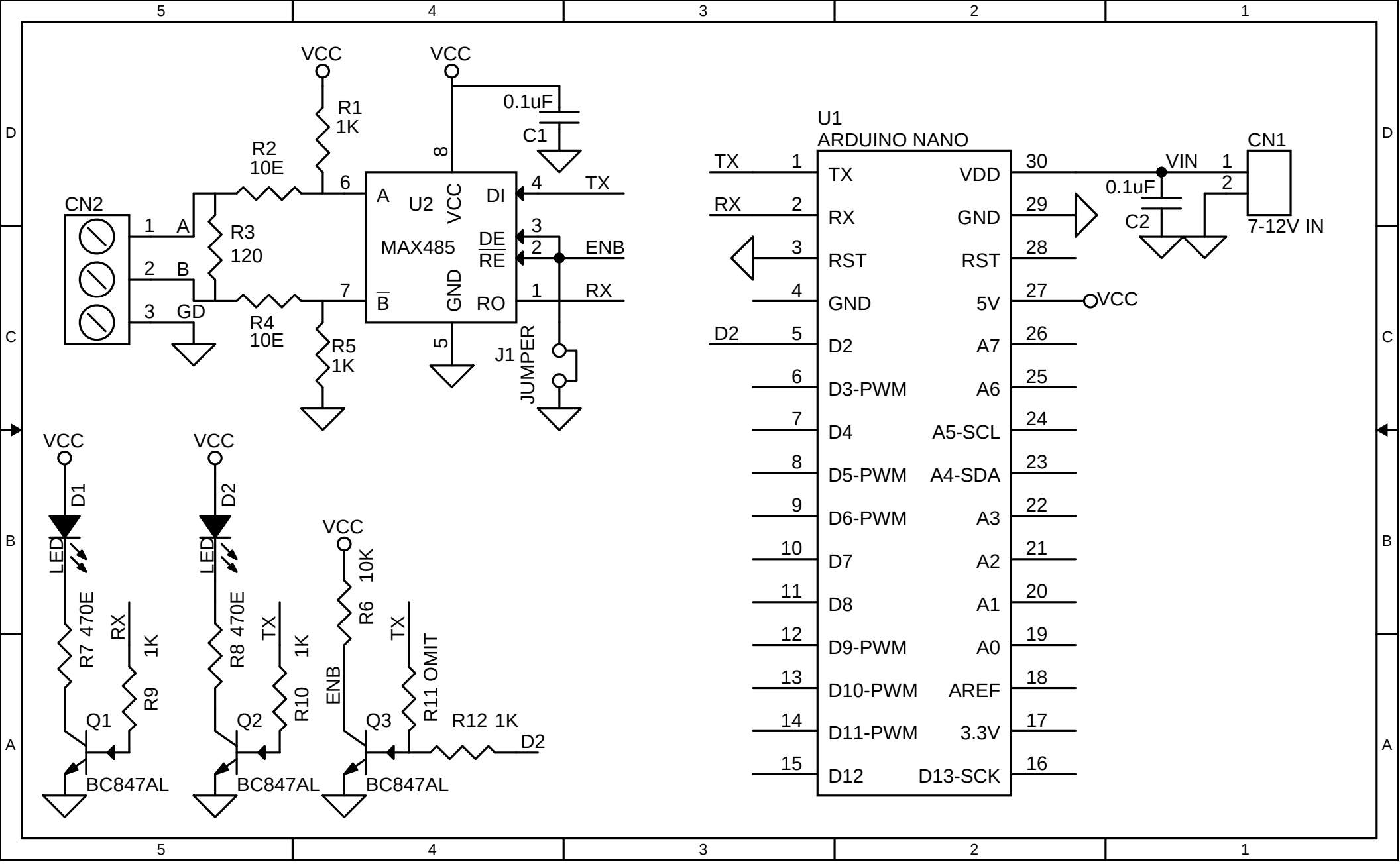
VCC
R1
1K
R2
10E
R3
120
R4
10E
R5
1K
CN2
1 A
2 B
3 GD
6
7
8
5
A
U2
VCC
MAX485
B
GND
DI
DE
RE
RO
4 TX
3
2 ENB
1 RX
0.1uF
C1
J1
JUMPER
U1
ARDUINO NANO
TX 1
RX 2
3 RST
4 GND
D2 5
6 D3-PWM
7 D4
8 D5-PWM
9 D6-PWM
10 D7
11 D8
12 D9-PWM
13 D10-PWM
14 D11-PWM
15 D12
TX
RST
GND
D2
A7
A6
A5-SCL
A4-SDA
A3
A2
A1
A0
AREF
3.3V
D13-SCK
VDD
GND
RST
5V
30
29
28
27
26
25
24
23
22
21
20
19
18
17
16
VCC
VIN
0.1uF
C2
CN1
1
2
7-12V IN
D1
LED
R7 470E
RX
R9
1K
Q1
BC847AL
D2
LED
R8 470E
TX
R10
1K
Q2
BC847AL
VCC
R6
10K
ENB
TX
R11 OMIT
Q3
BC847AL
R12 1K
D2