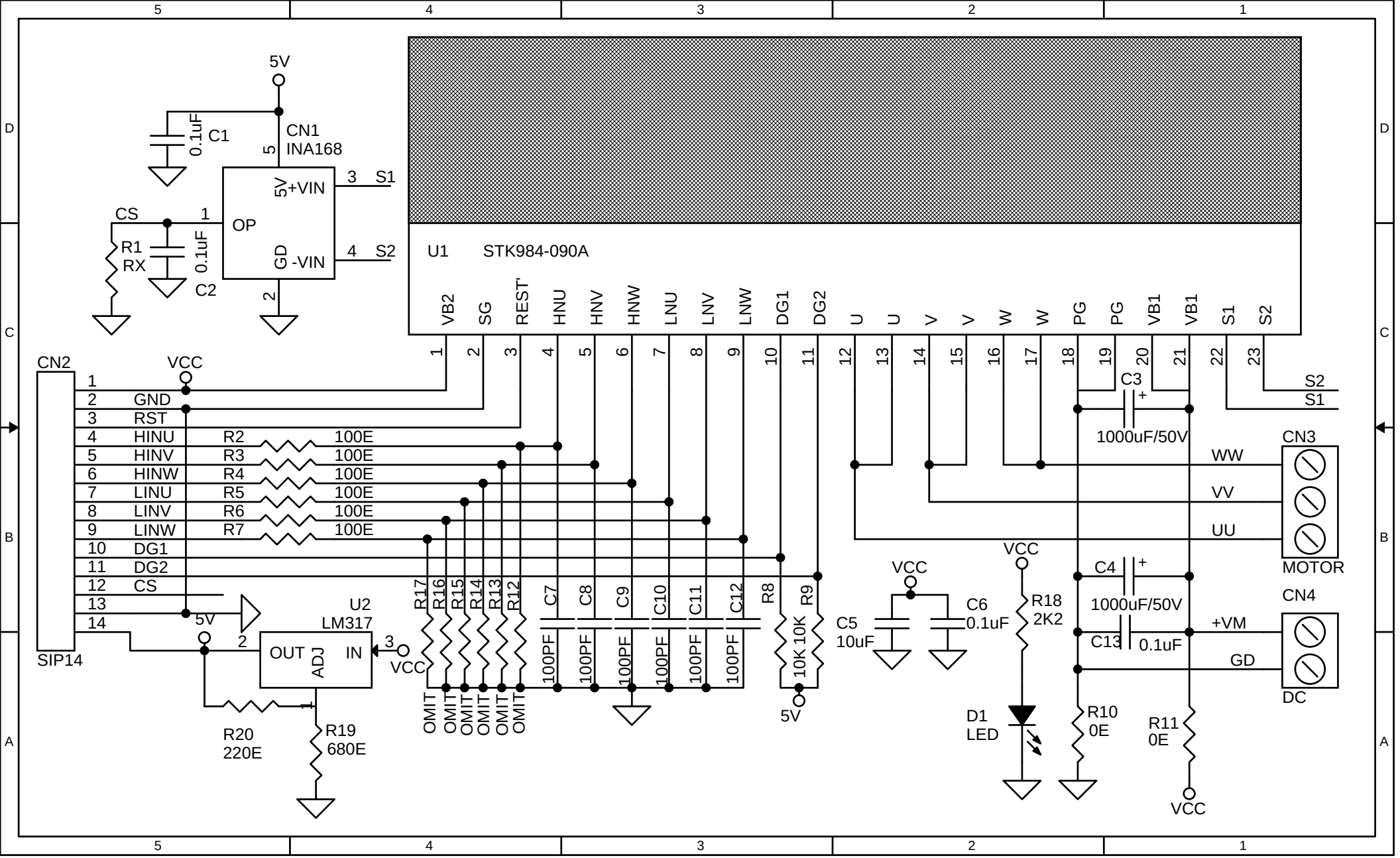
5V
C1
0.1uF
CN1
INA168
5V +VIN
3 S1
CS
1
OP
R1
RX
0.1uF
C2
GD -VIN
4 S2
2
U1 STK984-090A
VB2 SG REST' HNU HNV HNW LNU LNV LNW DG1 DG2 U U V V W W PG PG VB1 VB1 S1 S2
CN2
SIP14
VCC
GND
RST
HINU
HINV
HINW
LINU
LINV
LINW
DG1
DG2
CS
R2 100E
R3 100E
R4 100E
R5 100E
R6 100E
R7 100E
R17 R16 R15 R14 R13 R12
OMIT
C7 C8 C9 C10 C11 C12
100PF
R8 R9
10K 10K
5V
U2
LM317
OUT ADJ IN
R20
220E
R19
680E
C3
1000uF/50V
C4
1000uF/50V
C13
0.1uF
C5
10uF
C6
0.1uF
R18
2K2
D1
LED
R10
0E
R11
0E
CN3
MOTOR
WW
VV
UU
CN4
DC
+VM
GD
S2
S1