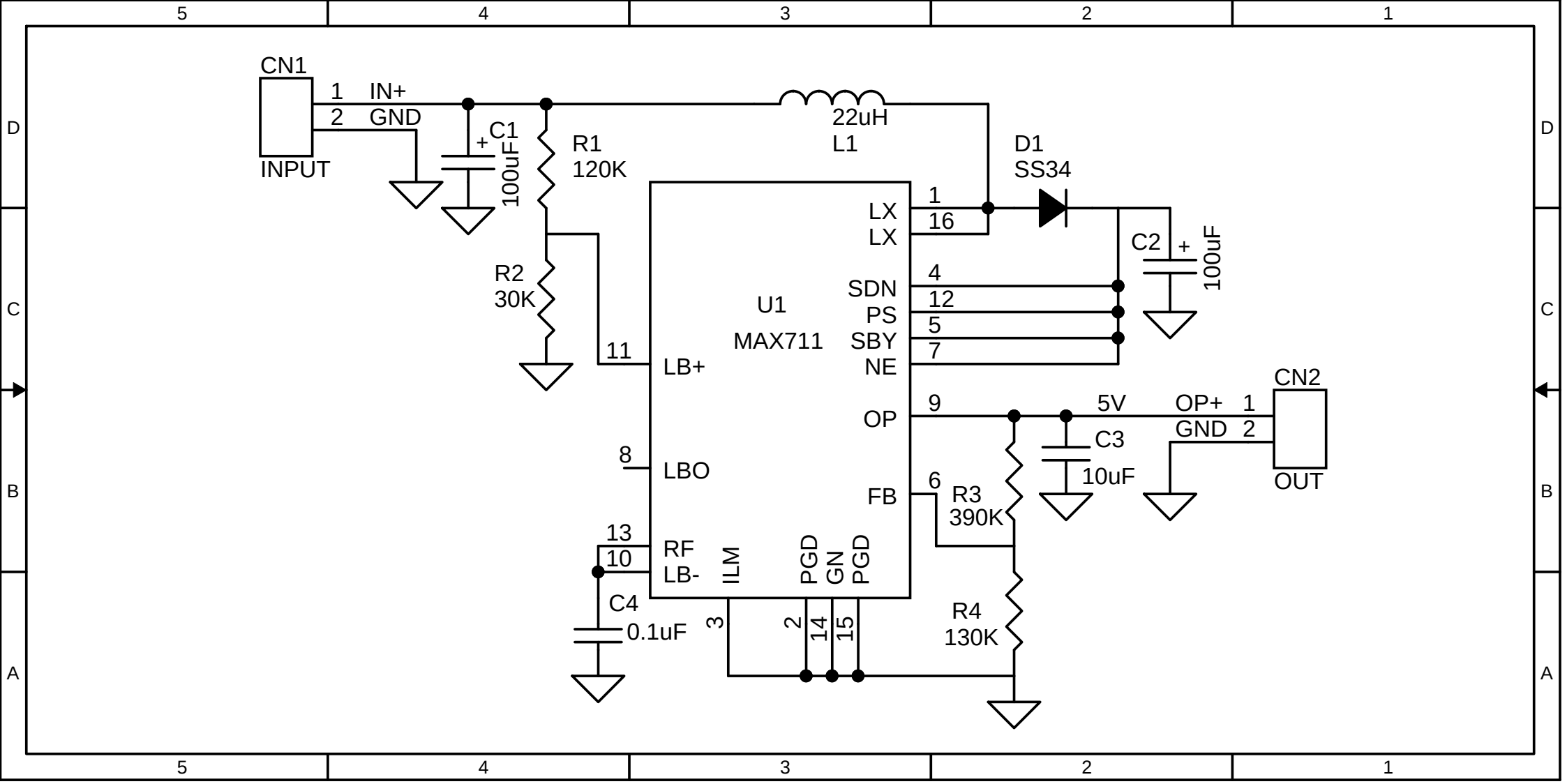
CN1
1 IN+
2 GND
INPUT
C1
100uF
R1
120K
R2
30K
22uH
L1
D1
SS34
C2
100uF
U1
MAX711
LX
LX
SDN
PS
SBY
NE
OP
FB
LB+
LBO
RF
LB-
ILM
PGD
GN
PGD
C3
10uF
R3
390K
R4
130K
C4
0.1uF
5V
OP+ 1
GND 2
CN2
OUT