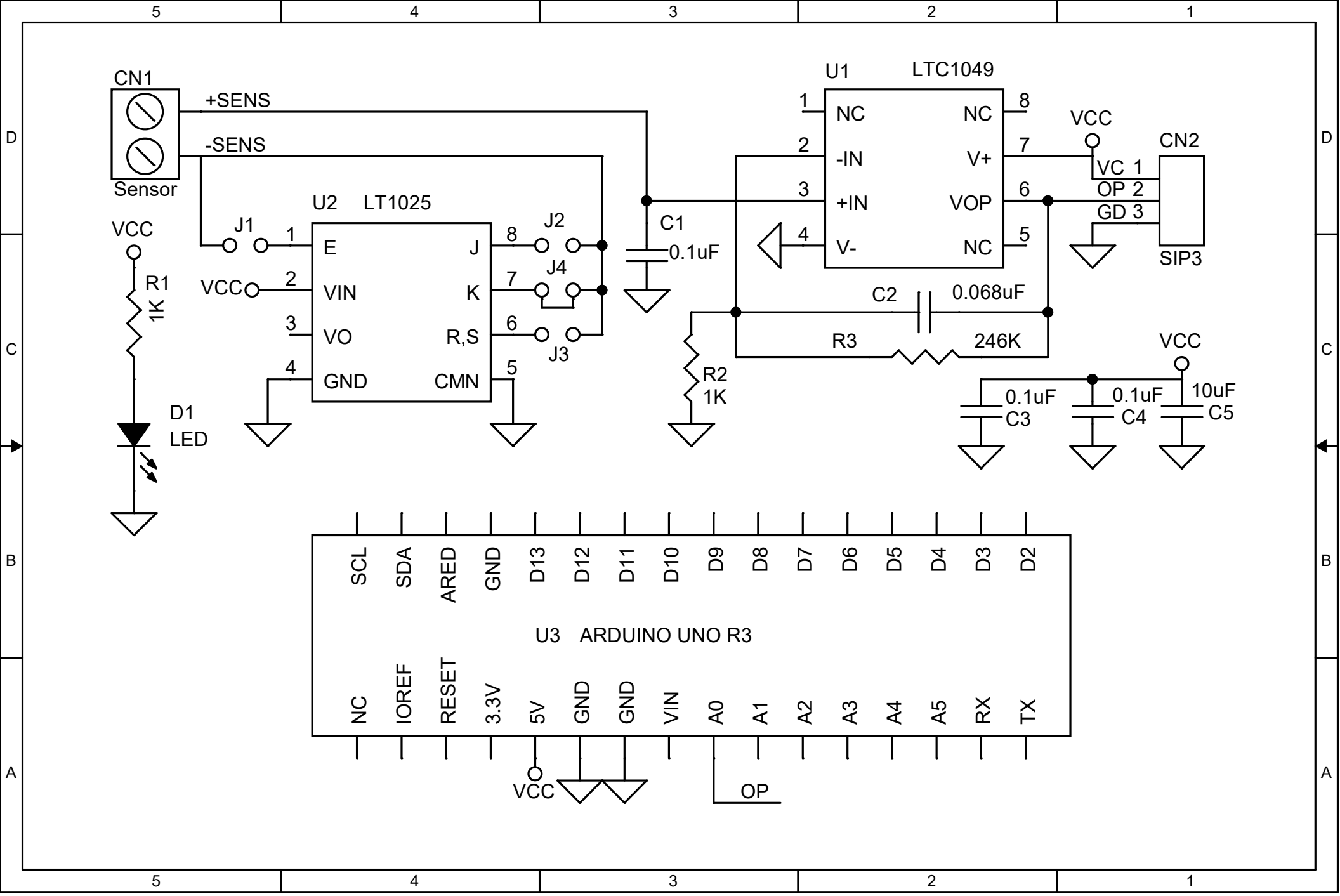
CN1
Sensor
+SENS
-SENS
U2 LT1025
E
VIN
VO
GND
J
K
R,S
CMN
J1
J2
J3
J4
VCC
R1
1K
D1
LED
C1
0.1uF
U1 LTC1049
NC
-IN
+IN
V-
NC
V+
VOP
NC
C2
0.068uF
R3
246K
R2
1K
VCC
CN2
VC 1
OP 2
GD 3
SIP3
0.1uF
C3
0.1uF
C4
10uF
C5
U3 ARDUINO UNO R3
SCL
SDA
AREF
GND
D13
D12
D11
D10
D9
D8
D7
D6
D5
D4
D3
D2
NC
IOREF
RESET
3.3V
5V
GND
GND
VIN
A0
A1
A2
A3
A4
A5
RX
TX
VCC
OP