ARDUINO COMPATIBLE 2 DIGIT 7 SEGMENT DISPLAY BOARD FOR TIMER/COUNTER APPLICATION

The project presented here is an open source 2-digit 7 segment Arduino compatible display board. It can used in many applications that require 2-digit display and switches inputs. Possible application of this board is a 2-digit counter, 2-digit countdown timer, token display, score board etc. 2 x 7 segment 0.56-inch Common cathode displays are used in multiplexing mode. Refer to the connection table to check connections between display segments and Atmega328 chip. A led connected to A4 pin of IC is used as indicator LED. All 3 switches have pull-up resistors of 10Kohms, 220E ohms series resistors used between I/O pin of Atmega328 chip and display segments.

Boot-Loader/Arduino Code Uploading

A bare new Atmega328 chip requires bootloader-burning and code uploading, follow the link bellow to learn both operations.

https://www.arduino.cc/en/Tutorial/BuiltInExamples/ArduinoToBreadboard

Features

- Operating Power Supply VCC 5V DC @ 50mA (Cn1)
- 3 Tactile Switches with pull up resistors
- A LED on A4 pin for function

Example code provided to test the board. it is 99 second count down timer with adjustable time 00 to 99 Seconds.

ARDUINO PIN VS DISPLAY		
ATMEGA328 Pin	**ARDUINO PIN**	**DISPLAY**
PIN16	D10	SEGMENT A
PIN15	D9	SEGMENT B
PIN14	D8	SEGMENT C
PIN13	D7	SEGMENT D
PIN12	D6	SEGMENT E
PIN17	D11	SEGMENT F
PIN18	D12	SEGMENT G
PIN23	A0	DP1
PIN24	A1	DP2
3 X SWITCHES		
SWITCH	**ARDUINO PIN**	**ATMEGA328 PIN**
SWITCH 1	D2	PIN4
SWITCH2	D3	PIN5
SWITCH 3	D13	PIN19

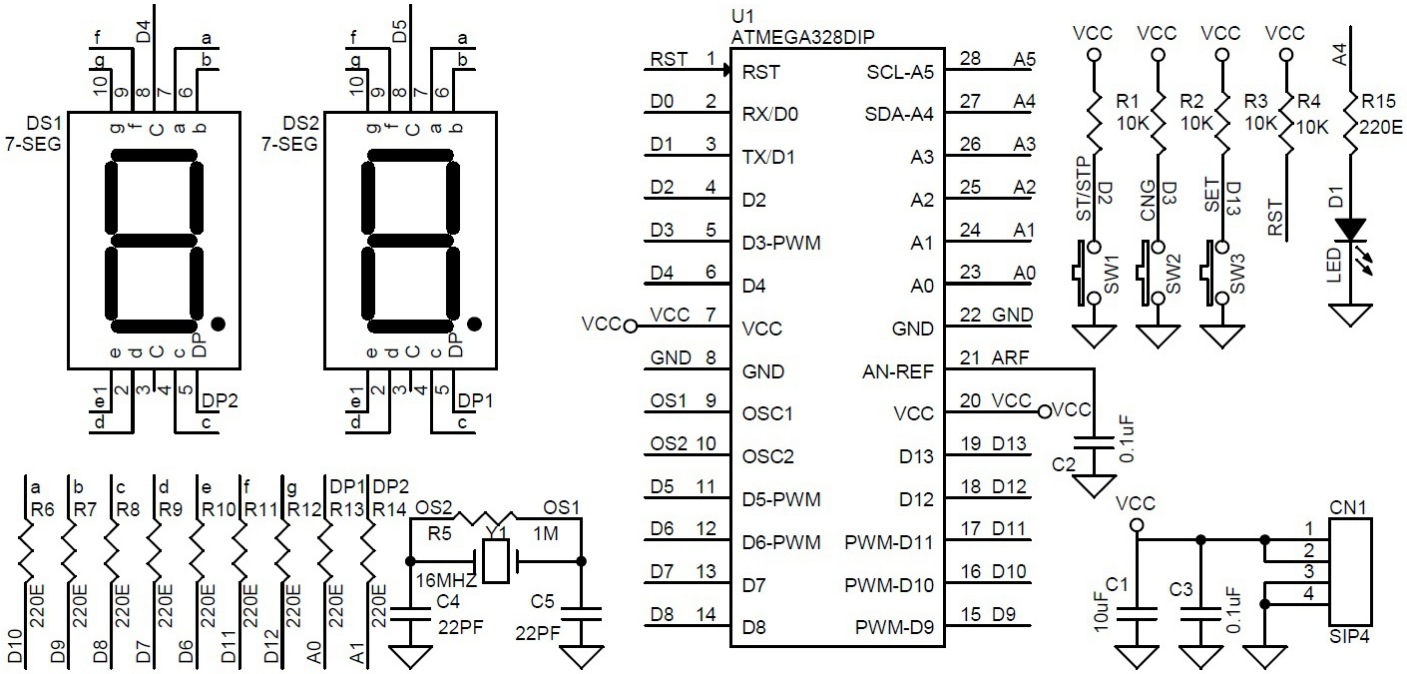
DS1
7-SEG
DS2
7-SEG
U1
ATMEGA328DIP
RST
RX/D0
TX/D1
D2
D3-PWM
D4
VCC
GND
OSC1
OSC2
D5-PWM
D6-PWM
D7
D8
SCL-A5
SDA-A4
A3
A2
A1
A0
AN-REF
D13
D12
PWM-D11
PWM-D10
PWM-D9
R1 10K
R2 10K
R3 10K
R4 10K
R15 220E
ST/STP
CNG
SET
SW1
SW2
SW3
LED
D1
C2 0.1uF
C1 10uF
C3 0.1uF
CN1
SIP4
R5 1M
Y1 16MHZ
C4 22PF
C5 22PF
OS1
OS2
R6 220E
R7 220E
R8 220E
R9 220E
R10 220E
R11 220E
R12 220E
R13 220E
R14 220E

07005

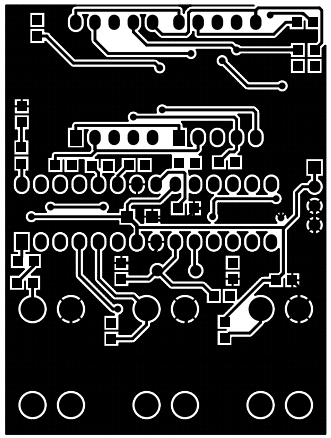

TOP LAYER

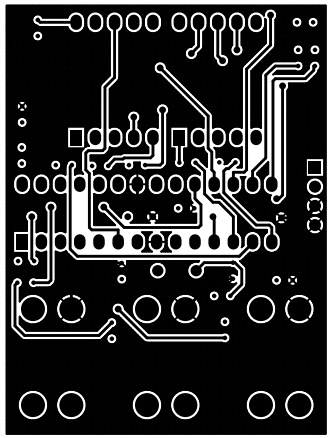

BOTTOM LAYER

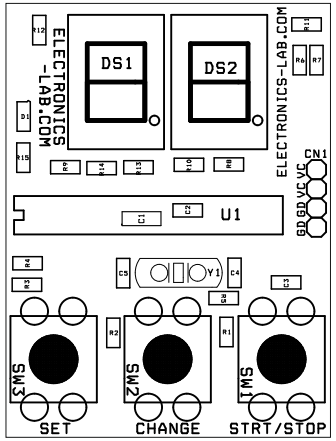

SILK SCREEN TOP

PCB DIMENSIONS 57.15MM X 42.55MM

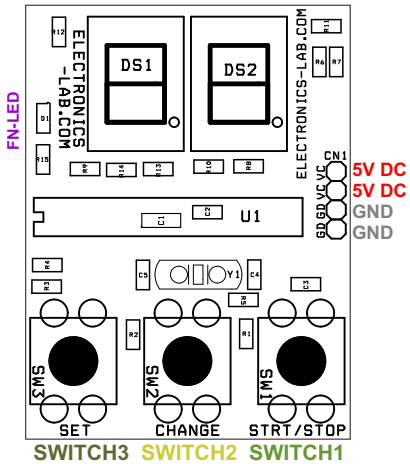

BOM				
SR.	QNTY.	REF.	DESC	VENDOR/DIGIKEY/MOUSER
1	1	CN1	4 PIN MALE HEADER 2.54MM	DIGIKEY DIGIKEY S1011EC-40-ND
2	1	C1	10uF/16V SMD SIZE 1206	YAGEO
3	2	C2,C3	0.1uF/50V SMD SIZE 0805	YAGEO
4	2	C4,C5	22PF/50V SMD SIZE 0805	YAGEO
5	2	DS1,DS2	0.56INCH COMMON CATHODE	DIGIKEY 754-2300-ND
6	1	D1	RED LED SMD SIZE 0805	DIGIKEY 475-1415-6-ND
7	4	R1,R2,R3,R4	10K 5% SMD SIZE0805	YAGEO
8	1	R5	1M 5% SMD SIZE 0805	YAGEO
9	10	R6 TO R15	220E 5% SMD SIZE 0805	YAGEO
10	1	SW1	TACTILE SWITCH	DIGIKEY 679-2372-ND
11	1	SW2	TACTILE SWITCH	DIGIKEY 679-2372-ND
12	1	SW3	TACTILE SWITCH	DIGIKEY 679-2372-ND
13	1	U1	ATMEGA328DIP	DIGIKEY ATMEGA328-PU-ND
14	1	Y1	16MHZ CRYSTAL	DIGIKEY X1103-ND
15	2	SOCKET	2 X 14PIN FEMALE HEADER	IC SOKCET