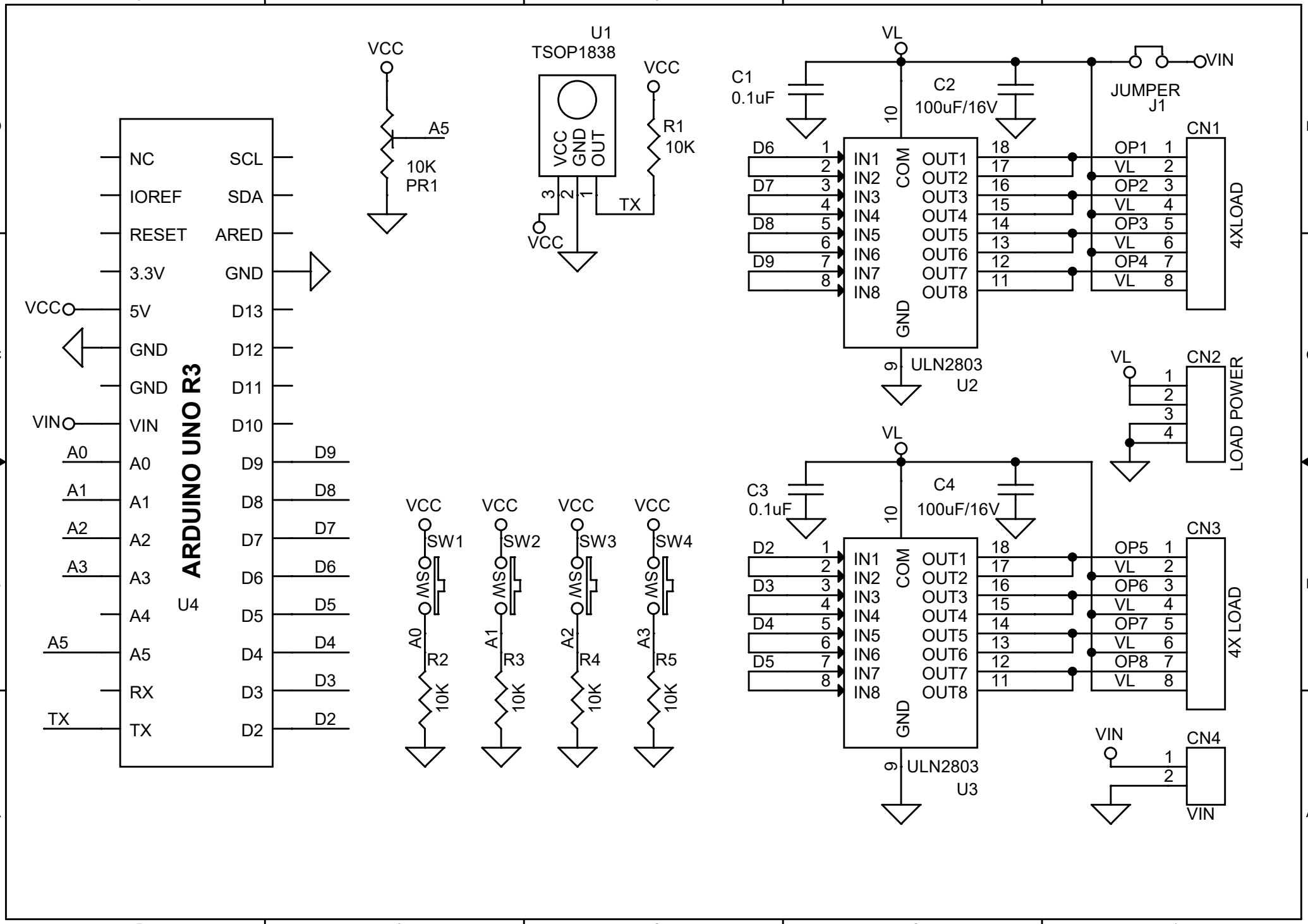
ARDUINO UNO R3
U4
NC
IOREF
RESET
3.3V
5V
GND
GND
VIN
A0
A1
A2
A3
A4
A5
RX
TX
SCL
SDA
ARED
GND
D13
D12
D11
D10
D9
D8
D7
D6
D5
D4
D3
D2
VCC
VIN
A5
10K
PR1
U1
TSOP1838
VCC
GND
OUT
R1
10K
TX
SW1
SW2
SW3
SW4
MS
R2
R3
R4
R5
C1
0.1uF
C2
100uF/16V
VL
JUMPER
J1
IN1
IN2
IN3
IN4
IN5
IN6
IN7
IN8
COM
GND
OUT1
OUT2
OUT3
OUT4
OUT5
OUT6
OUT7
OUT8
ULN2803
U2
CN1
4XLOAD
OP1
OP2
OP3
OP4
CN2
LOAD POWER
C3
0.1uF
C4
100uF/16V
ULN2803
U3
CN3
4X LOAD
OP5
OP6
OP7
OP8
CN4