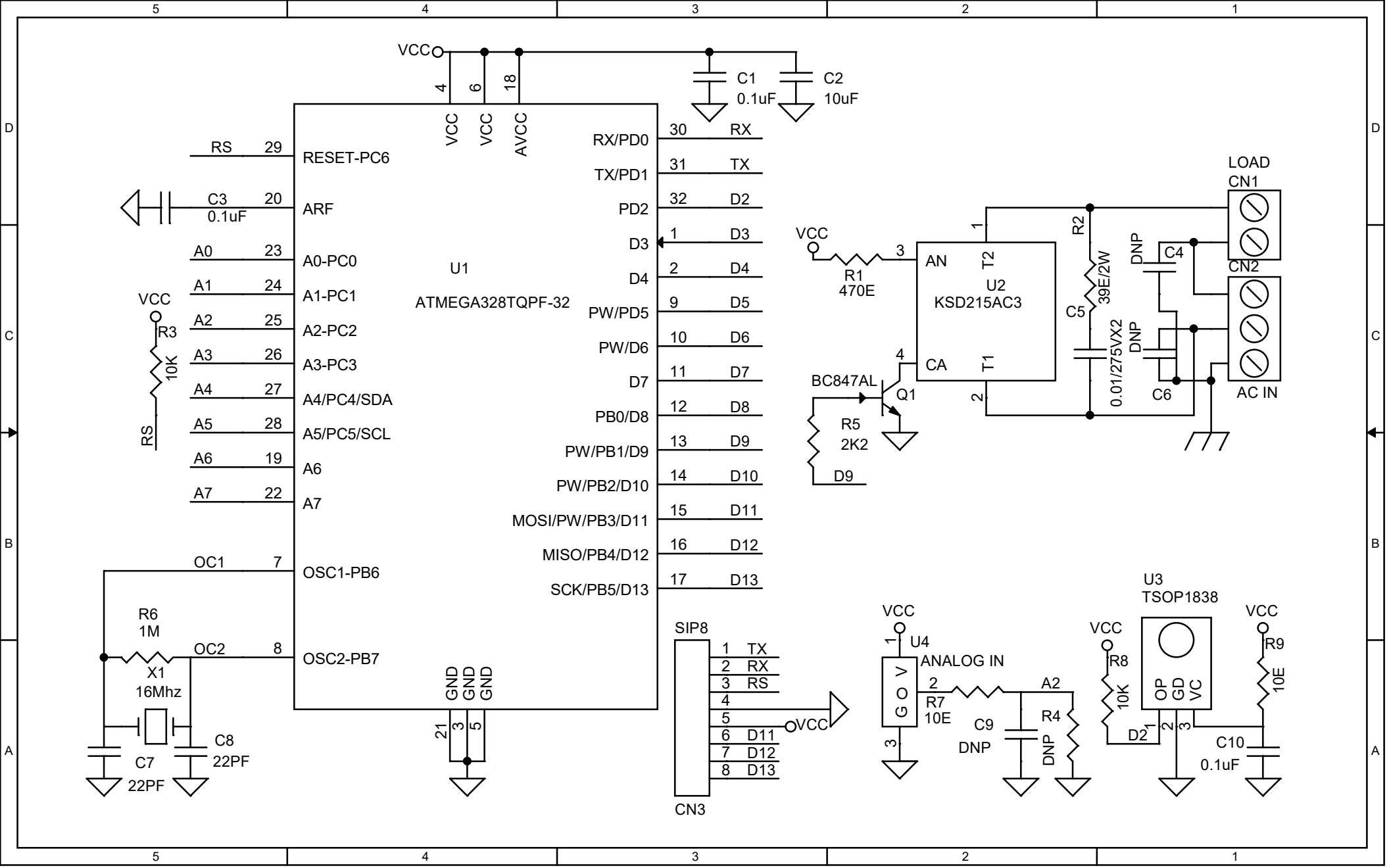
VCC
C1
0.1uF
C2
10uF
U1
ATMEGA328TQPF-32
RESET-PC6
ARF
A0-PC0
A1-PC1
A2-PC2
A3-PC3
A4/PC4/SDA
A5/PC5/SCL
A6
A7
OSC1-PB6
OSC2-PB7
RX/PD0
TX/PD1
PD2
D3
D4
PW/PD5
PW/D6
D7
PB0/D8
PW/PB1/D9
PW/PB2/D10
MOSI/PW/PB3/D11
MISO/PB4/D12
SCK/PB5/D13
VCC
VCC
AVCC
GND
GND
GND
RS
C3
0.1uF
R3
10K
RS
OC1
OC2
R6
1M
X1
16Mhz
C7
22PF
C8
22PF
SIP8
CN3
TX
RX
RS
VCC
D11
D12
D13
RX
TX
D2
D3
D4
D5
D6
D7
D8
D9
D10
D11
D12
D13
R1
470E
BC847AL
Q1
R5
2K2
D9
U2
KSD215AC3
AN
CA
T2
T1
R2
39E/2W
C5
0.01/275VX2
DNP
C4
DNP
C6
LOAD
CN1
CN2
AC IN
U4
ANALOG IN
R7
10E
C9
DNP
R4
DNP
A2
U3
TSOP1838
R8
10K
D2
R9
10E
C10
0.1uF