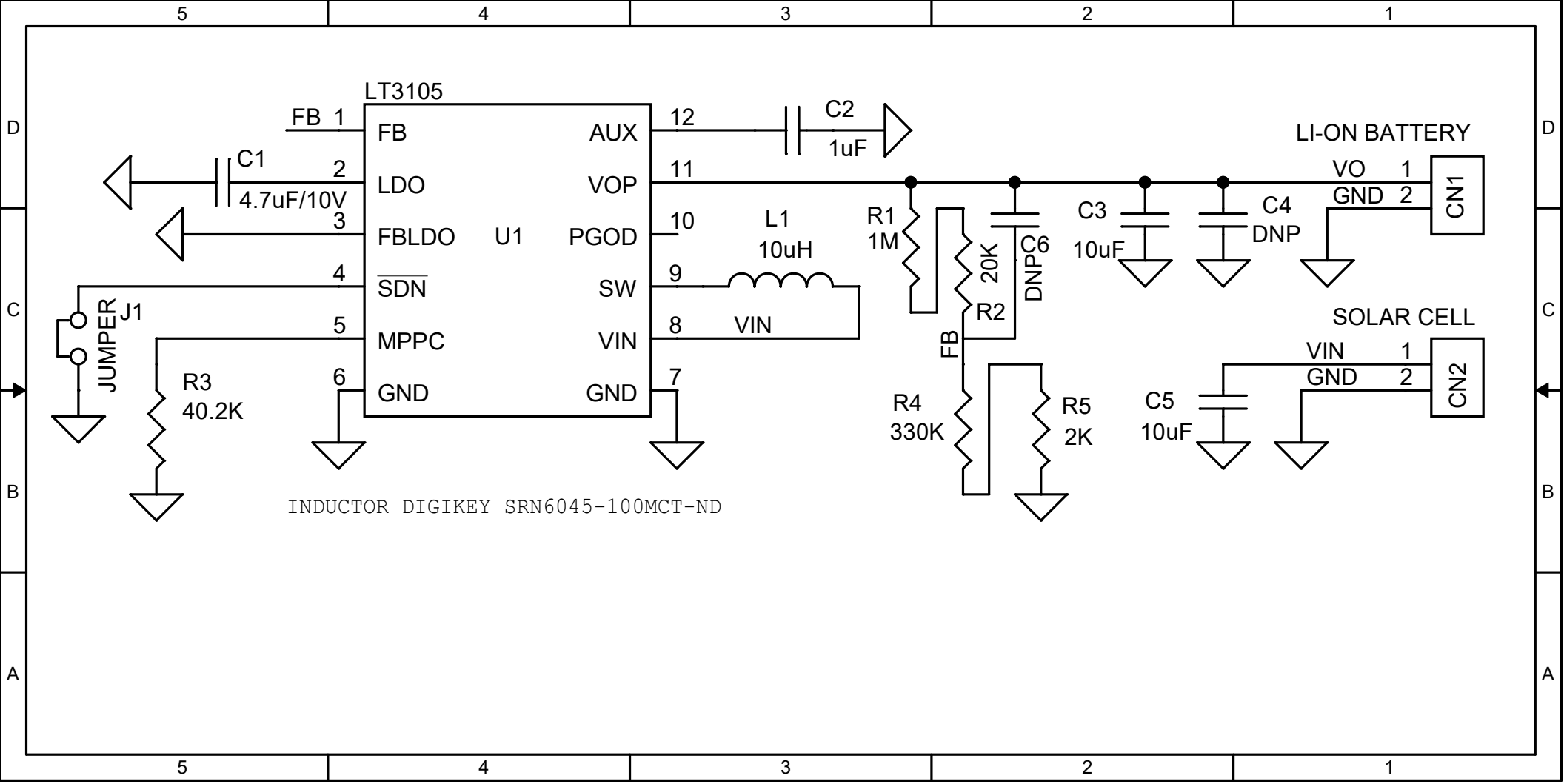
LT3105
FB 1
FB
2
LDO
3
FBLDO
4
SDN
5
MPPC
6
GND
U1
AUX
12
VOP
11
PGOD
10
SW
9
VIN
8
GND
7
C1
4.7uF/10V
C2
1uF
L1
10uH
VIN
R1
1M
R2
20K
C6
DNP
FB
R4
330K
R5
2K
C3
10uF
C4
DNP
C5
10uF
LI-ON BATTERY
VO 1
GND 2
CN1
SOLAR CELL
VIN 1
GND 2
CN2
J1
JUMPER
R3
40.2K
INDUCTOR DIGIKEY SRN6045-100MCT-ND