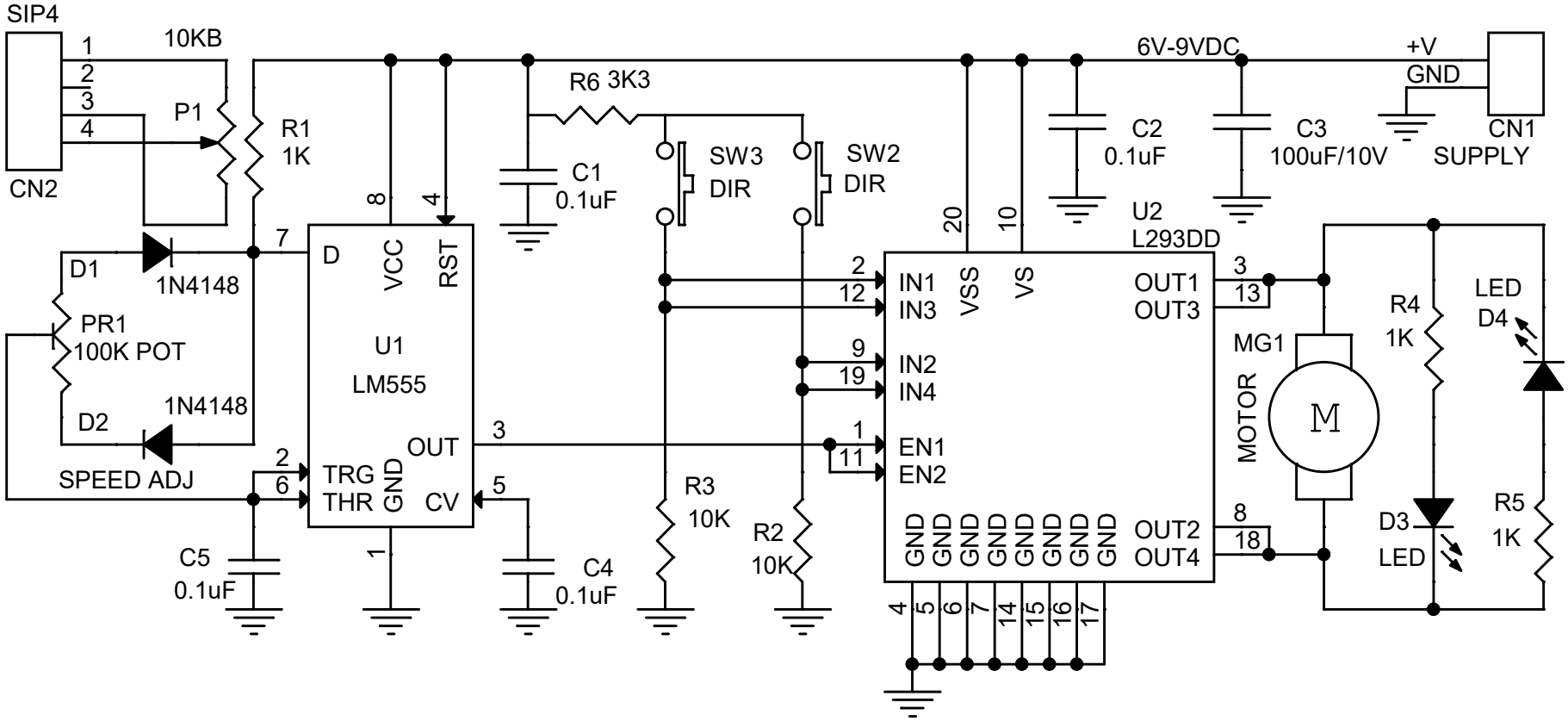
SIP4
CN2
10KB
P1
R1
1K
D1
1N4148
PR1
100K POT
D2
1N4148
SPEED ADJ
C5
0.1uF
U1
LM555
D
VCC
RST
TRG
THR
GND
OUT
CV
C1
0.1uF
C4
0.1uF
R6 3K3
SW3
DIR
SW2
DIR
R3
10K
R2
10K
6V-9VDC
C2
0.1uF
C3
100uF/10V
U2
L293DD
IN1
IN3
IN2
IN4
EN1
EN2
VSS
VS
OUT1
OUT3
OUT2
OUT4
GND
MG1
MOTOR
M
R4
1K
LED
D4
D3
LED
R5
1K
+V
GND
CN1
SUPPLY