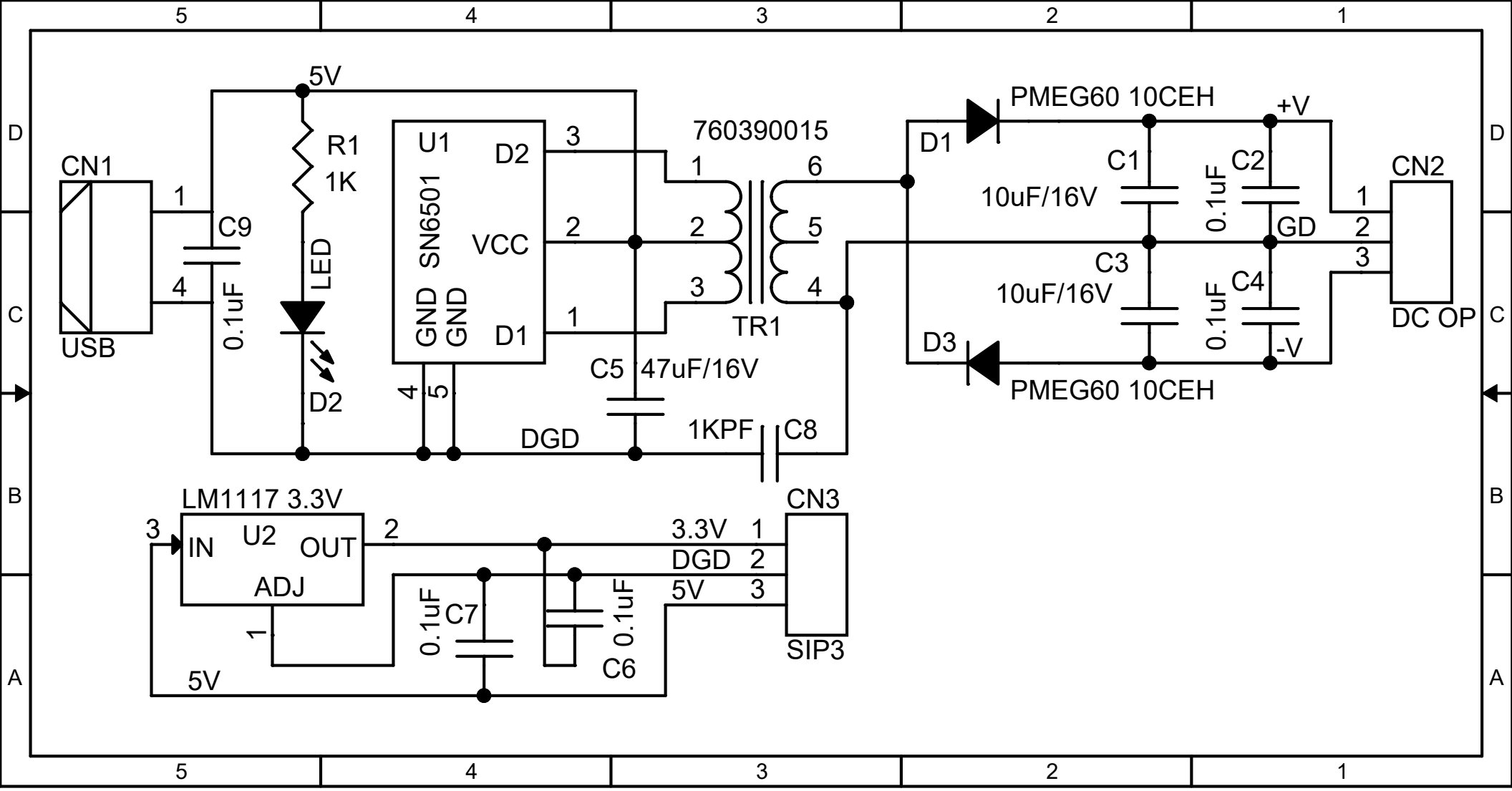
5V
R1
1K
CN1
USB
C9
0.1uF
LED
D2
U1
SN6501
D2
VCC
GND
GND
D1
760390015
TR1
C5
47uF/16V
DGD
1KPF
C8
PMEG60 10CEH
D1
D3
PMEG60 10CEH
C1
10uF/16V
C2
0.1uF
C3
10uF/16V
C4
0.1uF
+V
GD
-V
CN2
DC OP
LM1117 3.3V
U2
IN
OUT
ADJ
C7
0.1uF
C6
0.1uF
5V
CN3
SIP3
3.3V
DGD
5V