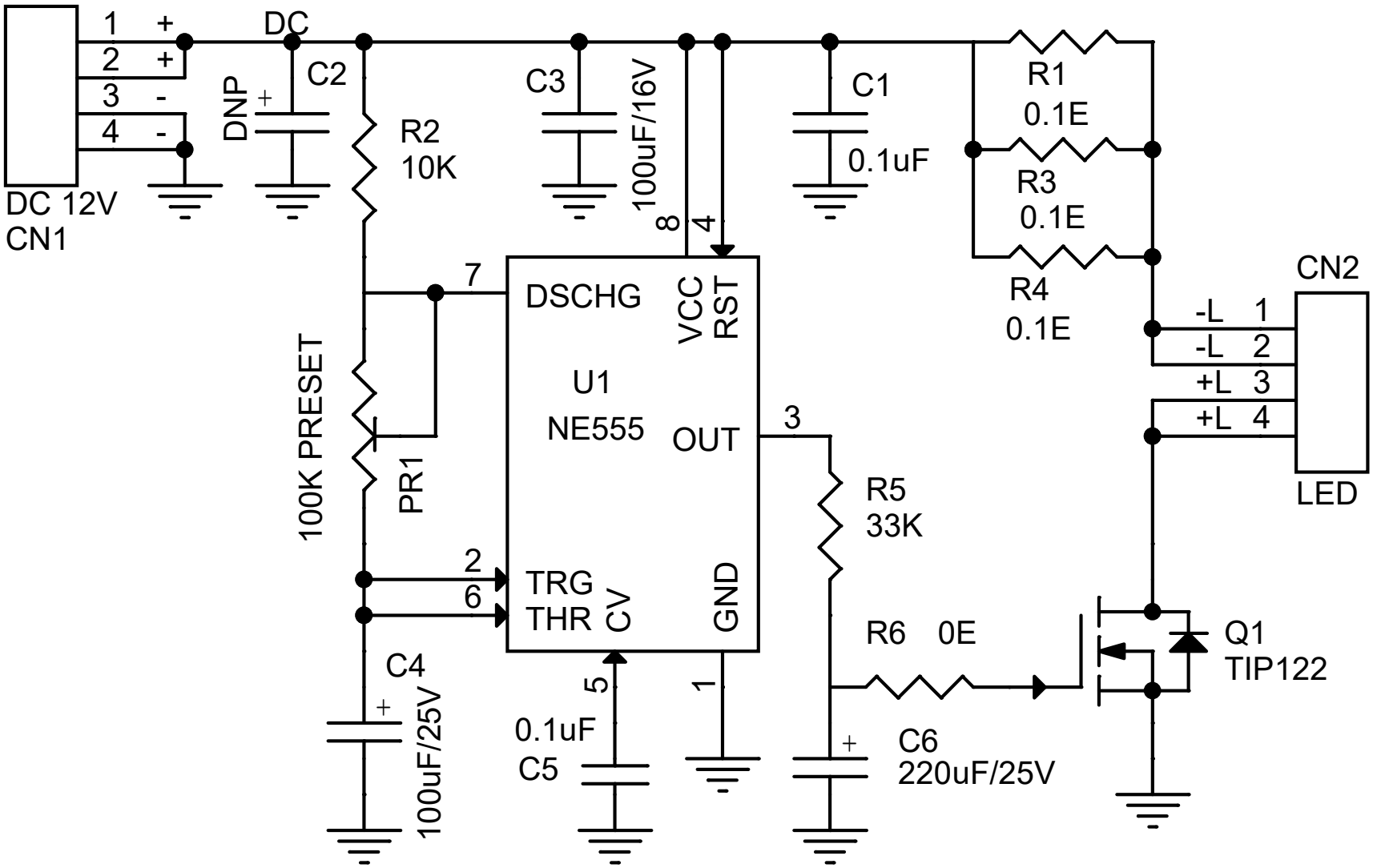
1 +
2 +
3 -
4 -
DC 12V
CN1
DC
DNP
C2
R2
10K
C3
100uF/16V
8
4
C1
0.1uF
R1
0.1E
R3
0.1E
R4
0.1E
CN2
-L 1
-L 2
+L 3
+L 4
LED
7
DSCHG
VCC
RST
U1
NE555
OUT
3
R5
33K
100K PRESET
PR1
2
6
TRG
THR
CV
GND
R6 0E
Q1
TIP122
C4
100uF/25V
5
1
0.1uF
C5
C6
220uF/25V