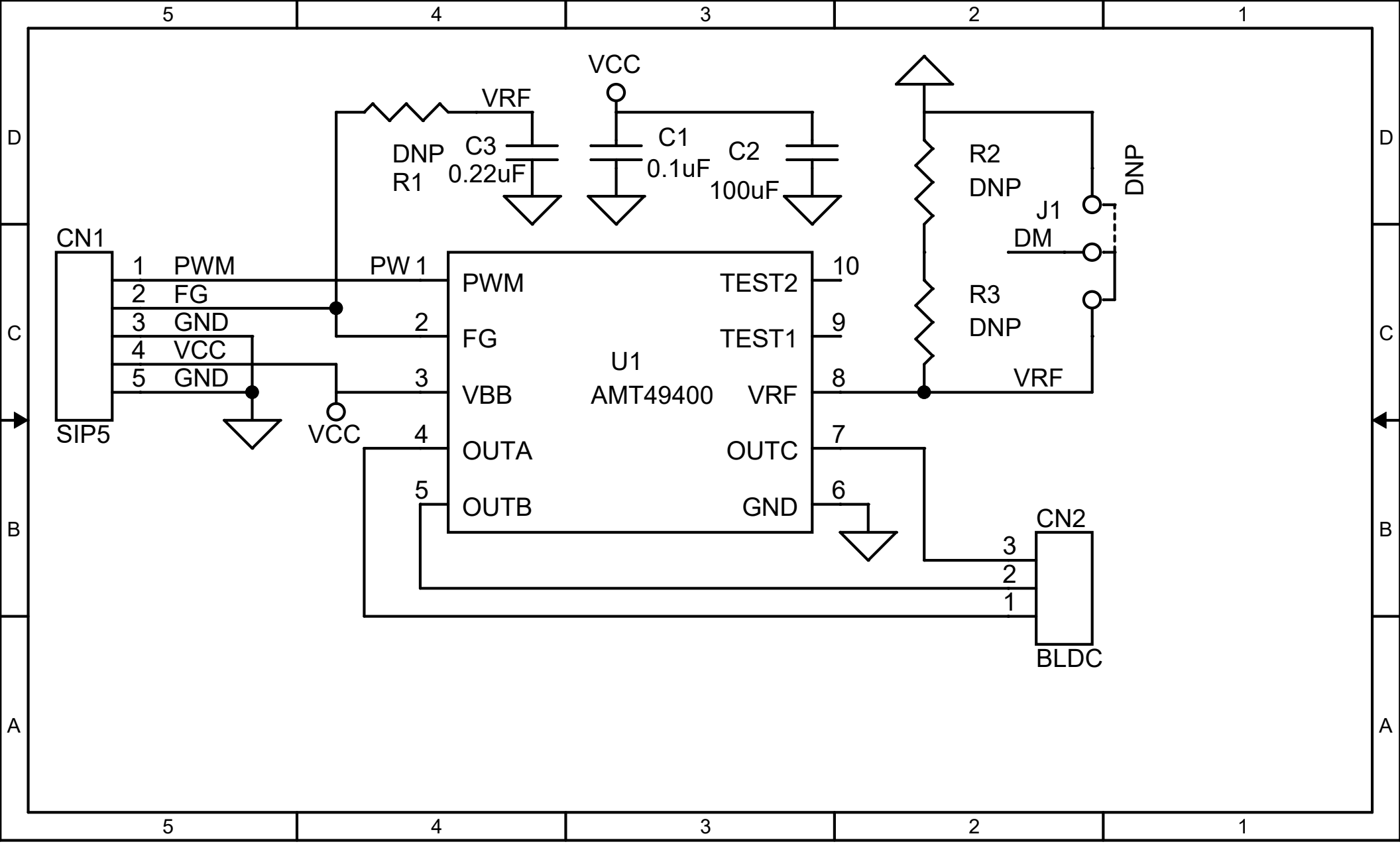
VCC
VRF
DNP
R1
C3
0.22uF
C1
0.1uF
C2
100uF
R2
DNP
R3
DNP
DNP
J1
DM
VRF
CN1
SIP5
1 PWM
2 FG
3 GND
4 VCC
5 GND
VCC
PW 1
2
3
4
5
PWM
FG
VBB
OUTA
OUTB
U1
AMT49400
TEST2
TEST1
VRF
OUTC
GND
10
9
8
7
6
CN2
3
2
1
BLDC