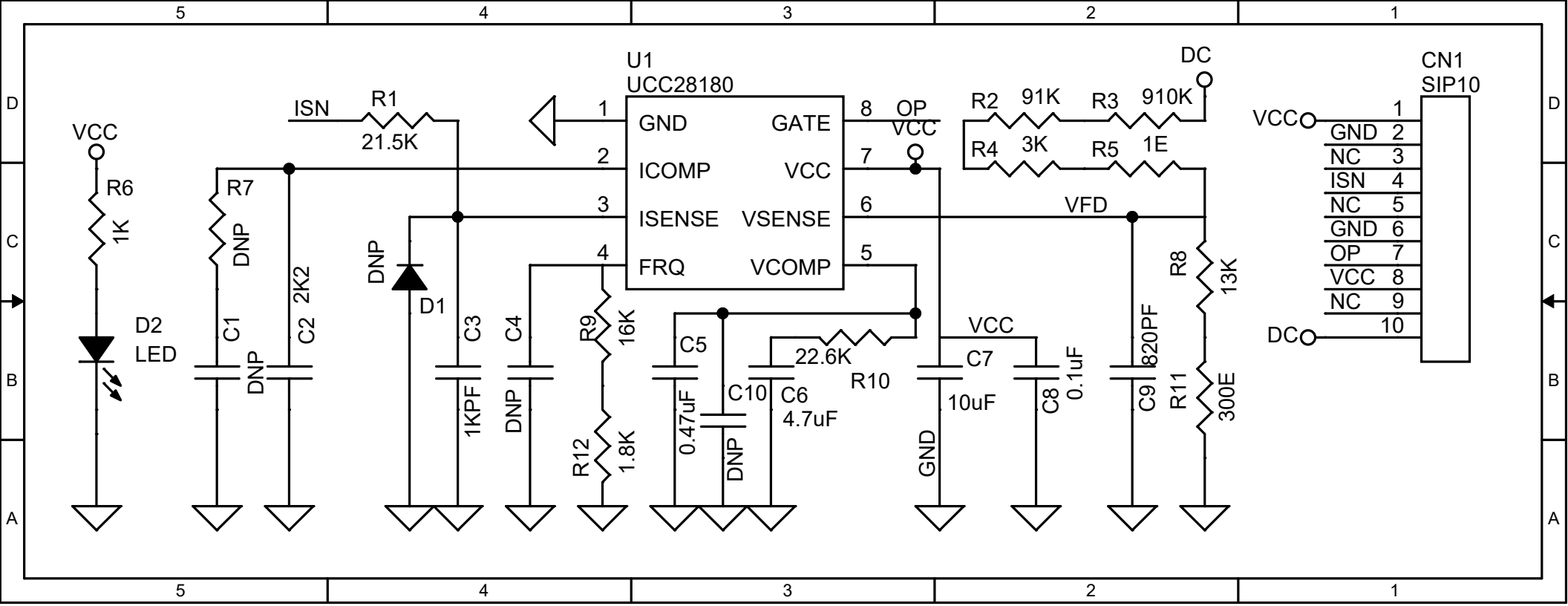
U1
UCC28180
GND
ICOMP
ISENSE
FRQ
GATE
VCC
VSENSE
VCOMP
OP
VCC
ISN
R1
21.5K
VCC
R6
1K
D2
LED
R7
DNP
C1
DNP
C2
2K2
DNP
D1
C3
1KPF
C4
DNP
R9
16K
R12
1.8K
C5
0.47uF
C10
DNP
C6
4.7uF
22.6K
R10
GND
VCC
C7
10uF
C8
0.1uF
VFD
C9
820PF
R8
13K
R11
300E
DC
R2
91K
R3
910K
R4
3K
R5
1E
CN1
SIP10
VCC
DC
GND
NC
ISN
NC
GND
OP
VCC
NC