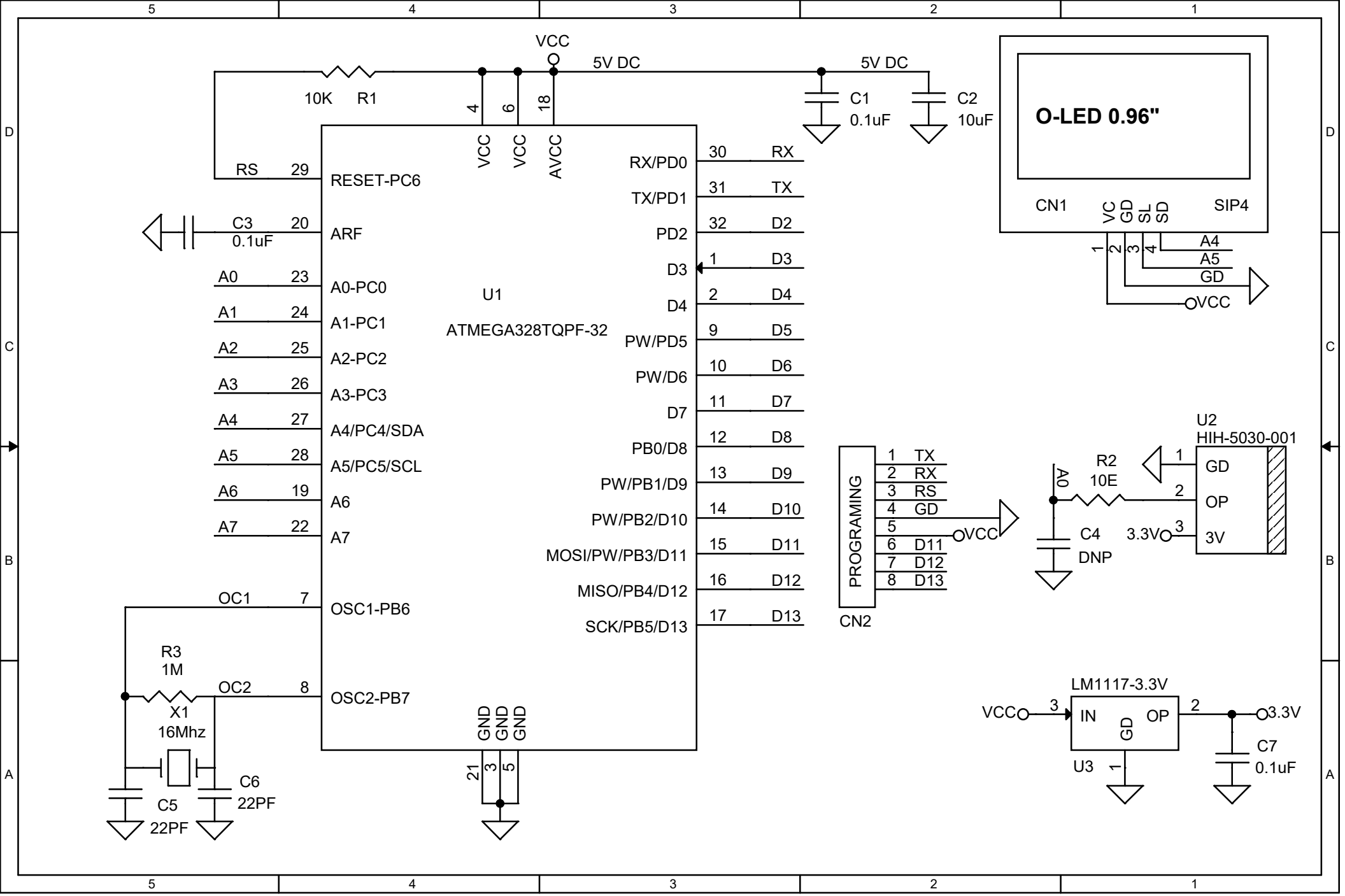
VCC
5V DC
5V DC
10K R1
C1
0.1uF
C2
10uF
O-LED 0.96"
CN1
VC GD SL SD
SIP4
A4
A5
GD
VCC
RS 29 RESET-PC6
C3 0.1uF 20 ARF
A0 23 A0-PC0
A1 24 A1-PC1
A2 25 A2-PC2
A3 26 A3-PC3
A4 27 A4/PC4/SDA
A5 28 A5/PC5/SCL
A6 19 A6
A7 22 A7
OC1 7 OSC1-PB6
OC2 8 OSC2-PB7
4 VCC
6 VCC
18 AVCC
U1
ATMEGA328TQPF-32
RX/PD0 30 RX
TX/PD1 31 TX
PD2 32 D2
D3 1 D3
D4 2 D4
PW/PD5 9 D5
PW/D6 10 D6
D7 11 D7
PB0/D8 12 D8
PW/PB1/D9 13 D9
PW/PB2/D10 14 D10
MOSI/PW/PB3/D11 15 D11
MISO/PB4/D12 16 D12
SCK/PB5/D13 17 D13
21 GND
3 GND
5 GND
R3
1M
X1
16Mhz
C5
22PF
C6
22PF
PROGRAMING
1 TX
2 RX
3 RS
4 GD
5
6 D11
7 D12
8 D13
CN2
VCC
A0
R2
10E
C4
DNP
U2
HIH-5030-001
1 GD
2 OP
3 3V
3.3V
LM1117-3.3V
VCC 3 IN
GD
OP 2
3.3V
U3
C7
0.1uF