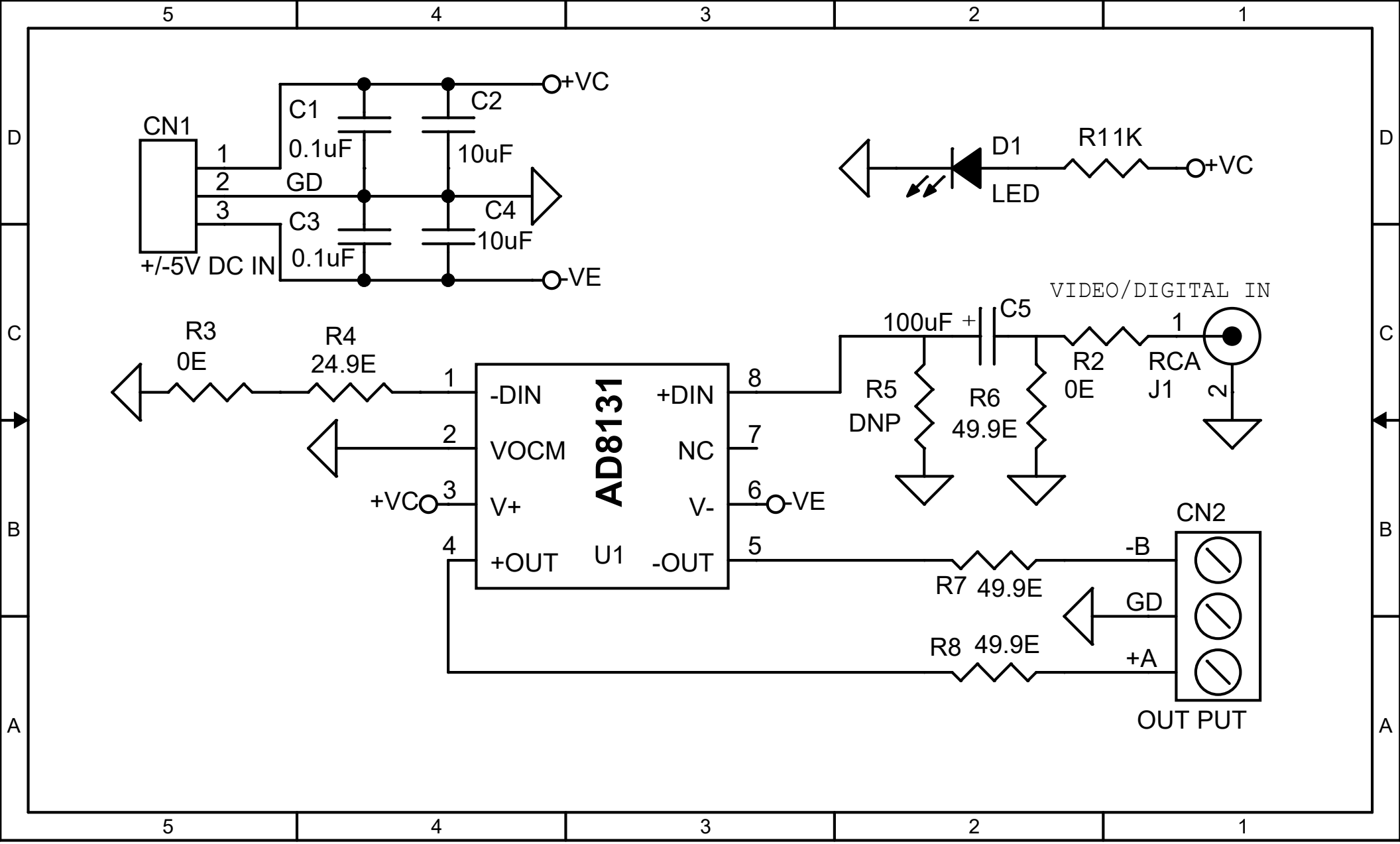
CN1
1
2
3
+/-5V DC IN
C1
0.1uF
GD
C3
0.1uF
C2
10uF
C4
10uF
+VC
-VE
D1
LED
R11K
+VC
VIDEO/DIGITAL IN
100uF
C5
1
R2
0E
RCA
J1
2
R5
DNP
R6
49.9E
R3
0E
R4
24.9E
-DIN
VOCM
V+
+OUT
AD8131
U1
+DIN
NC
V-
-OUT
+VC
-VE
R7 49.9E
R8 49.9E
CN2
-B
GD
+A
OUT PUT