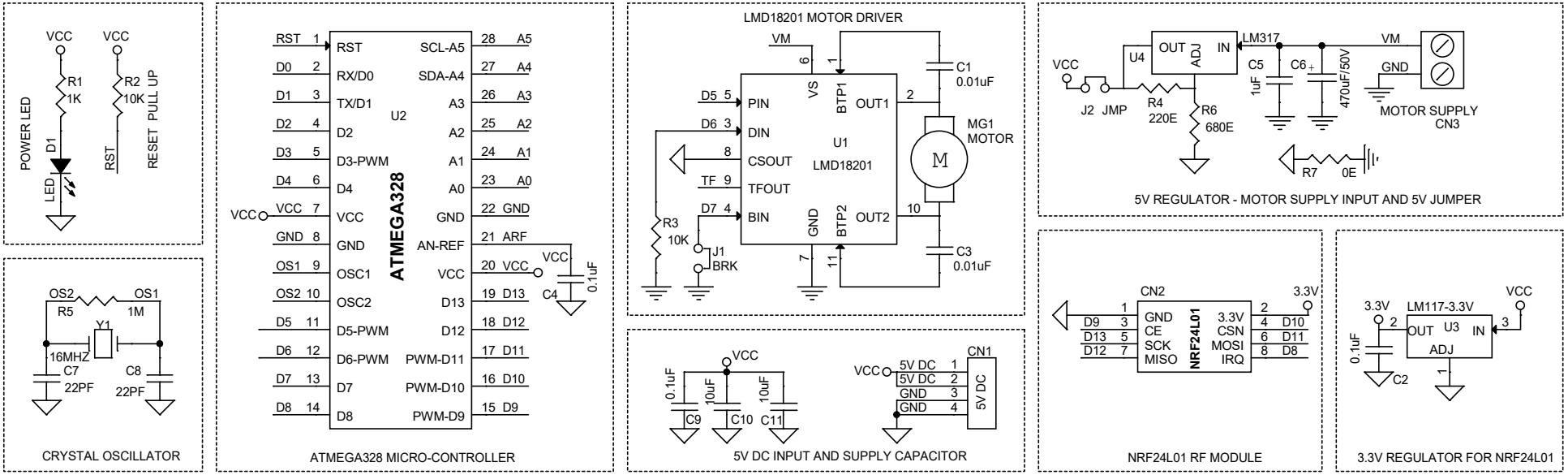
POWER LED
VCC
R1
1K
D1
LED
VCC
R2
10K
RST
RESET PULL UP
OS2
OS1
R5
1M
Y1
16MHZ
C7
22PF
C8
22PF
CRYSTAL OSCILLATOR
ATMEGA328
U2
RST 1
D0 2
D1 3
D2 4
D3 5
D4 6
VCC 7
GND 8
OS1 9
OS2 10
D5 11
D6 12
D7 13
D8 14
RST
RX/D0
TX/D1
D2
D3-PWM
D4
VCC
GND
OSC1
OSC2
D5-PWM
D6-PWM
D7
D8
SCL-A5 28 A5
SDA-A4 27 A4
A3 26 A3
A2 25 A2
A1 24 A1
A0 23 A0
GND 22 GND
AN-REF 21 ARF
VCC 20 VCC
D13 19 D13
D12 18 D12
PWM-D11 17 D11
PWM-D10 16 D10
PWM-D9 15 D9
VCC
C4
0.1uF
ATMEGA328 MICRO-CONTROLLER
LMD18201 MOTOR DRIVER
VM
6
1
VS
BTP1
PIN
DIN
CSOUT
TFOUT
BIN
D5 5
D6 3
8
TF 9
D7 4
OUT1
2
U1
LMD18201
GND
BTP2
OUT2
10
7
11
C1
0.01uF
MG1
MOTOR
M
C3
0.01uF
R3
10K
J1
BRK
VCC
0.1uF
10uF
10uF
C9
C10
C11
VCC
5V DC 1
5V DC 2
GND 3
GND 4
CN1
5V DC
5V DC INPUT AND SUPPLY CAPACITOR
VCC
J2 JMP
U4
OUT
ADJ
IN
LM317
R4
220E
R6
680E
C5
1uF
C6
470uF/50V
VM
GND
MOTOR SUPPLY
CN3
R7
0E
5V REGULATOR - MOTOR SUPPLY INPUT AND 5V JUMPER
CN2
1
D9 3
D13 5
D12 7
GND
CE
SCK
MISO
NRF24L01
3.3V
CSN
MOSI
IRQ
2
4 D10
6 D11
8 D8
3.3V
NRF24L01 RF MODULE
3.3V
LM117-3.3V
VCC
2
OUT
U3
IN
3
ADJ
1
0.1uF
C2
3.3V REGULATOR FOR NRF24L01