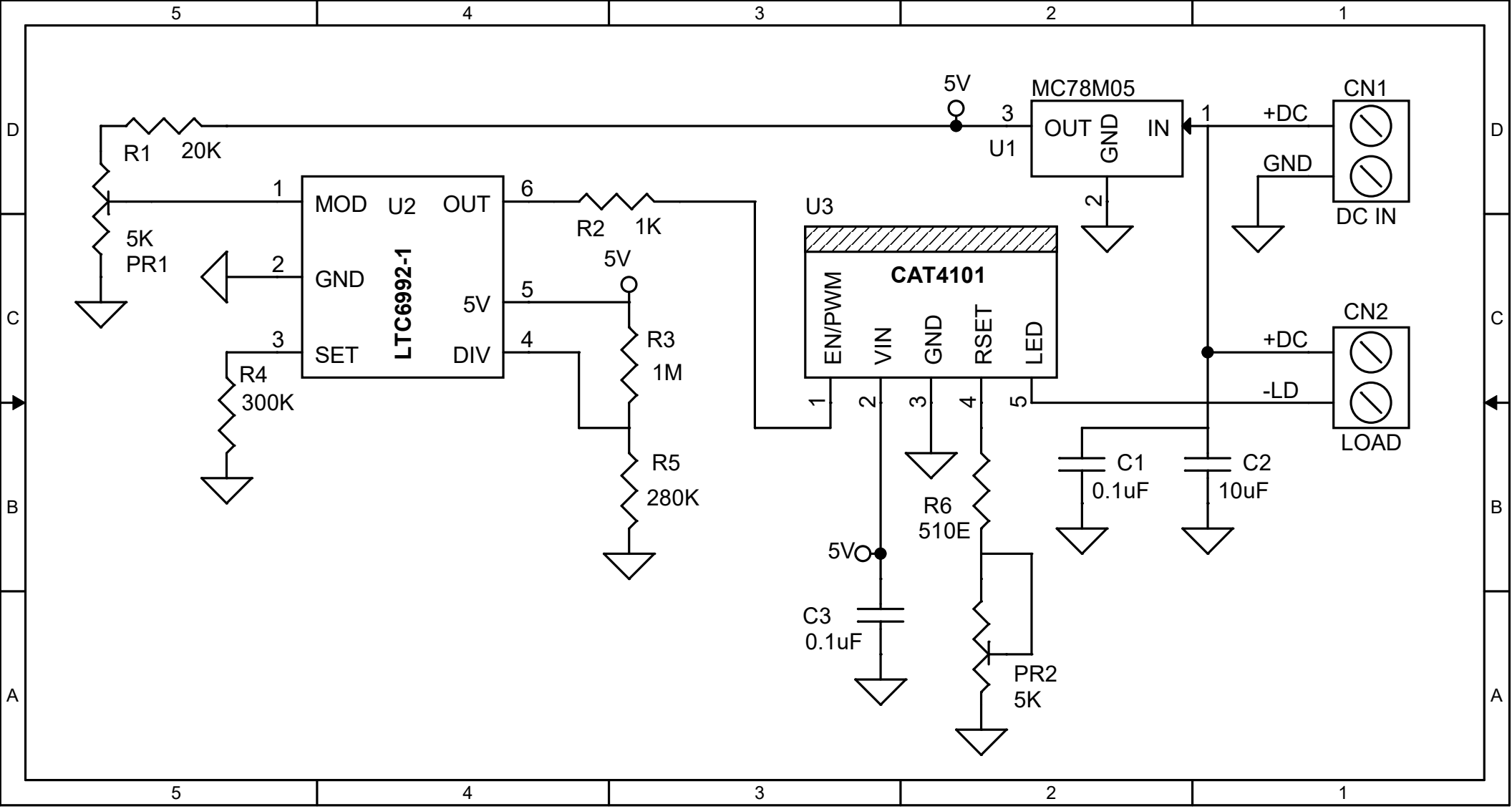
5V
MC78M05
OUT
GND
IN
U1
CN1
+DC
GND
DC IN
R1
20K
5K
PR1
MOD
U2
OUT
GND
5V
SET
DIV
LTC6992-1
R2
1K
5V
R3
1M
R4
300K
R5
280K
U3
CAT4101
EN/PWM
VIN
GND
RSET
LED
CN2
+DC
-LD
LOAD
C1
0.1uF
C2
10uF
R6
510E
5V
C3
0.1uF
PR2
5K