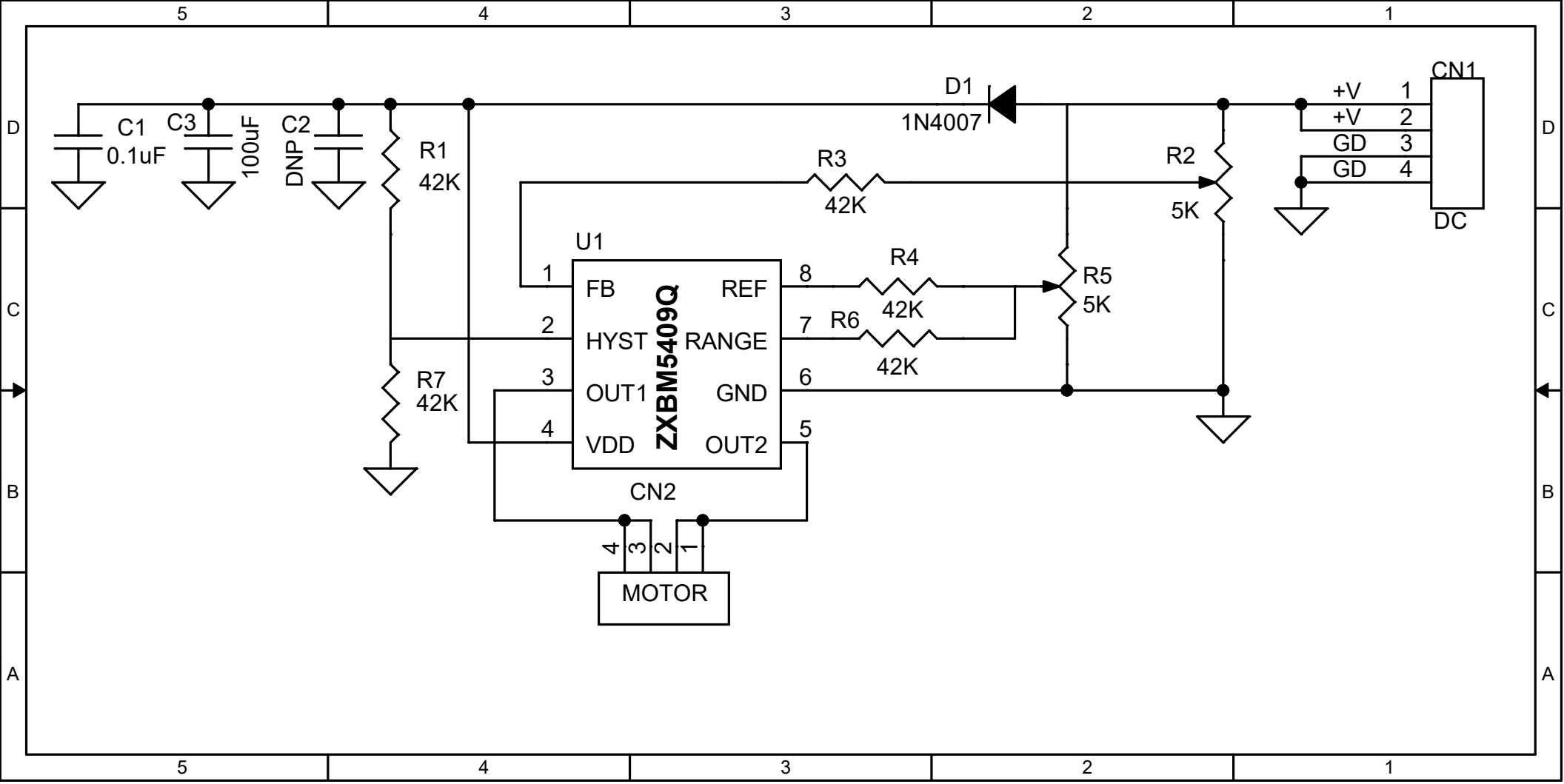
C1
0.1uF
C3
100uF
C2
DNP
R1
42K
R7
42K
D1
1N4007
R3
42K
R2
5K
R4
42K
R6
42K
R5
5K
U1
ZXBM5409Q
FB
HYST
OUT1
VDD
REF
RANGE
GND
OUT2
CN2
MOTOR
CN1
DC
+V
+V
GD
GD