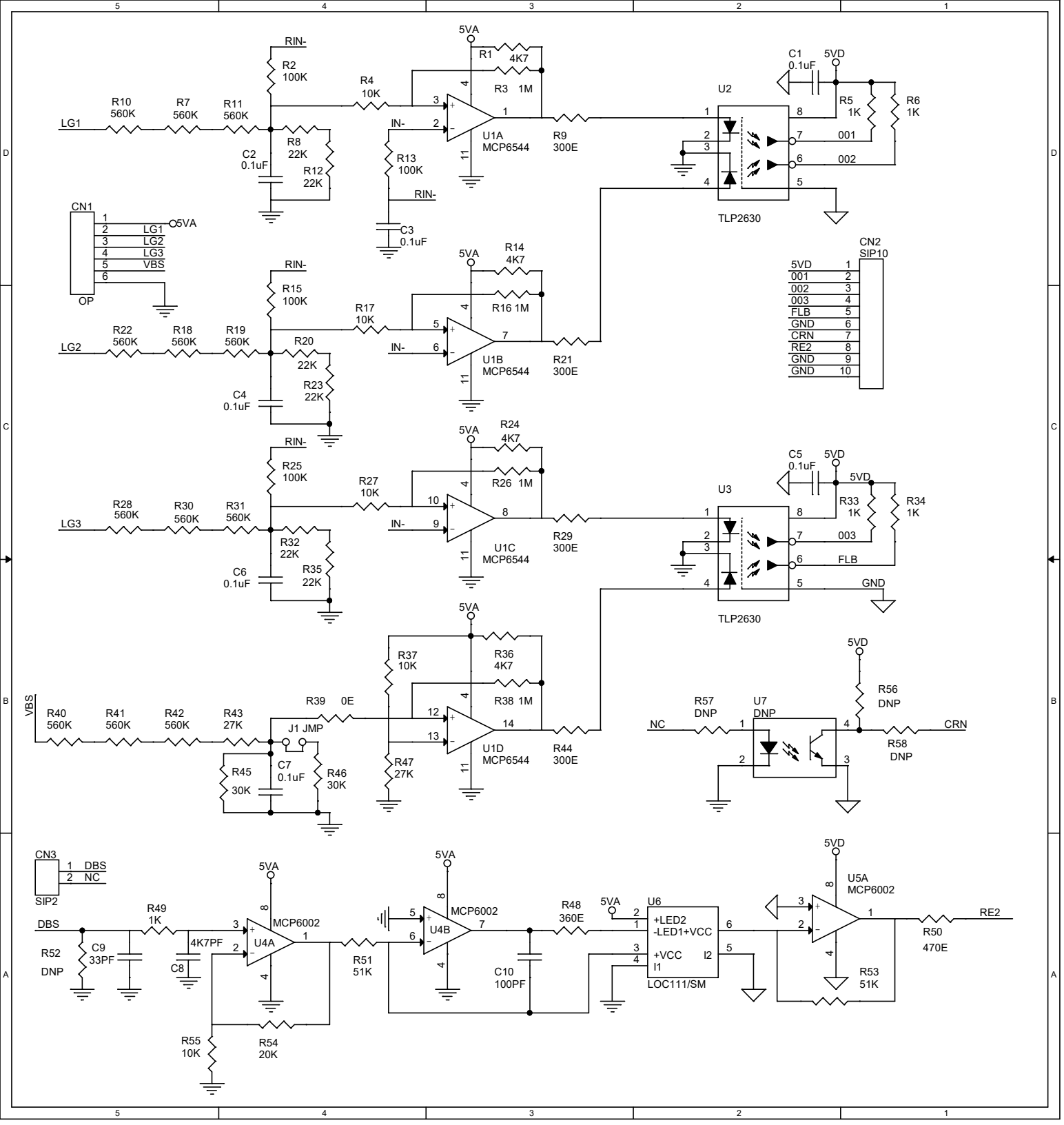
5VA
RIN-
R2 100K
R4 10K
R1 4K7
R3 1M
LG1
R10 560K
R7 560K
R11 560K
R8 22K
C2 0.1uF
R12 22K
IN-
R13 100K
U1A MCP6544
R9 300E
C3 0.1uF
C1 0.1uF
5VD
U2
R5 1K
R6 1K
001
002
TLP2630
CN1
LG1
LG2
LG3
VBS
OP
R15 100K
R17 10K
R14 4K7
R16 1M
LG2
R22 560K
R18 560K
R19 560K
R20 22K
R23 22K
C4 0.1uF
U1B MCP6544
R21 300E
CN2 SIP10
5VD
001
002
003
FLB
GND
CRN
RE2
GND
GND
R25 100K
R27 10K
R24 4K7
R26 1M
LG3
R28 560K
R30 560K
R31 560K
R32 22K
R35 22K
C6 0.1uF
U1C MCP6544
R29 300E
C5 0.1uF
U3
R33 1K
R34 1K
003
FLB
GND
TLP2630
R37 10K
R36 4K7
R38 1M
VBS
R40 560K
R41 560K
R42 560K
R43 27K
R39 0E
J1 JMP
R45 30K
C7 0.1uF
R46 30K
R47 27K
U1D MCP6544
R44 300E
R56 DNP
R57 DNP
U7 DNP
NC
CRN
R58 DNP
CN3
DBS
NC
SIP2
R49 1K
DBS
R52 DNP
C9 33PF
4K7PF
C8
MCP6002
U4A
R51 51K
U4B
C10 100PF
R48 360E
U6
+LED2
-LED1+VCC
+VCC
I1
I2
LOC111/SM
U5A MCP6002
R50 470E
R53 51K
R55 10K
R54 20K