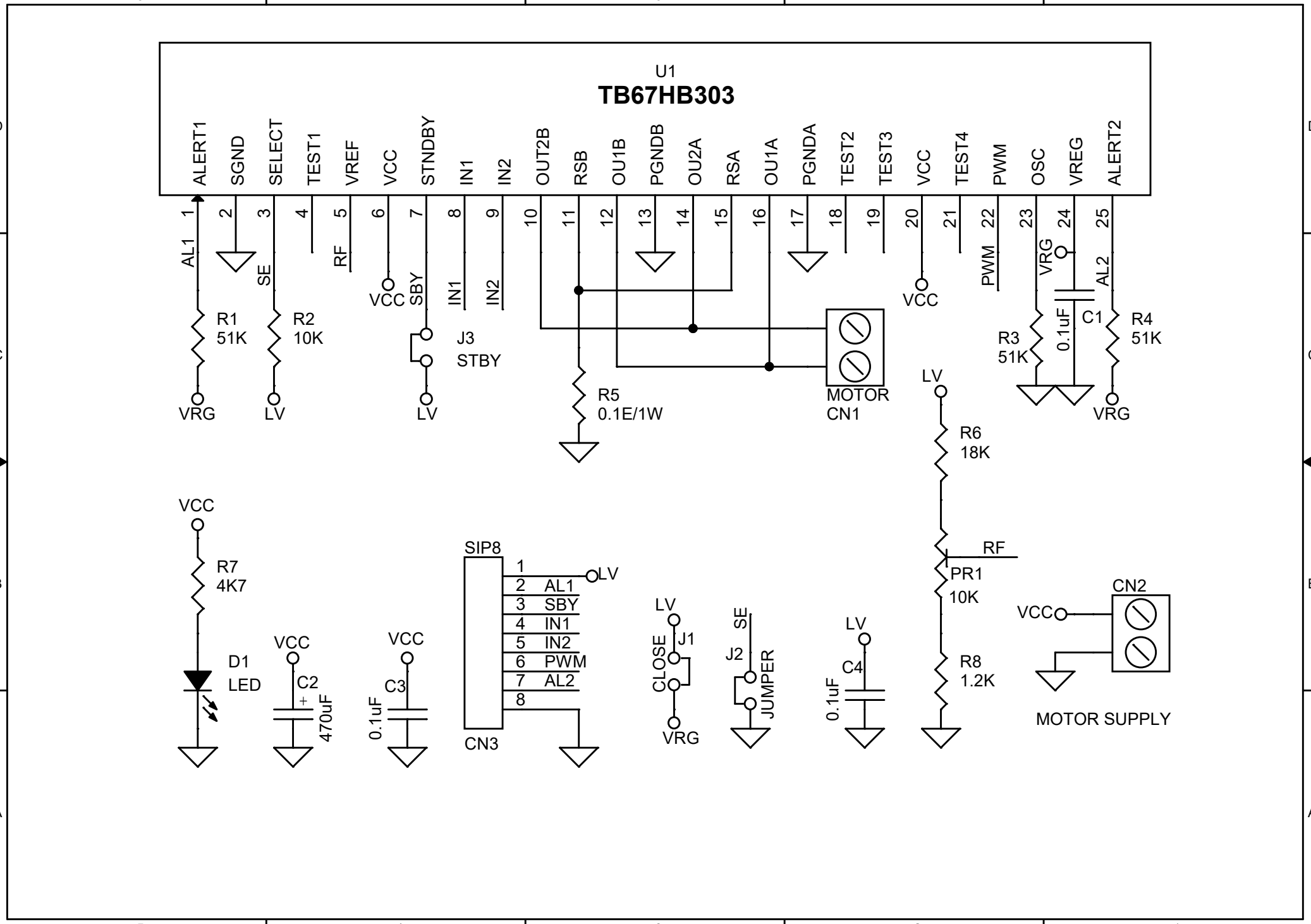
U1
TB67HB303
ALERT1
SGND
SELECT
TEST1
VREF
VCC
STNDBY
IN1
IN2
OUT2B
RSB
OU1B
PGNDB
OU2A
RSA
OU1A
PGNDA
TEST2
TEST3
VCC
TEST4
PWM
OSC
VREG
ALERT2
AL1
SE
RF
VCC
SBY
IN1
IN2
PWM
VRG
AL2
R1
51K
R2
10K
J3
STBY
R5
0.1E/1W
MOTOR
CN1
R3
51K
0.1uF
C1
R4
51K
VRG
LV
LV
VRG
LV
R6
18K
RF
PR1
10K
R8
1.2K
VCC
R7
4K7
D1
LED
VCC
C2
470uF
VCC
C3
0.1uF
SIP8
1
2 AL1
3 SBY
4 IN1
5 IN2
6 PWM
7 AL2
8
LV
CN3
LV
J1
CLOSE
VRG
SE
J2
JUMPER
LV
C4
0.1uF
VCC
CN2
MOTOR SUPPLY