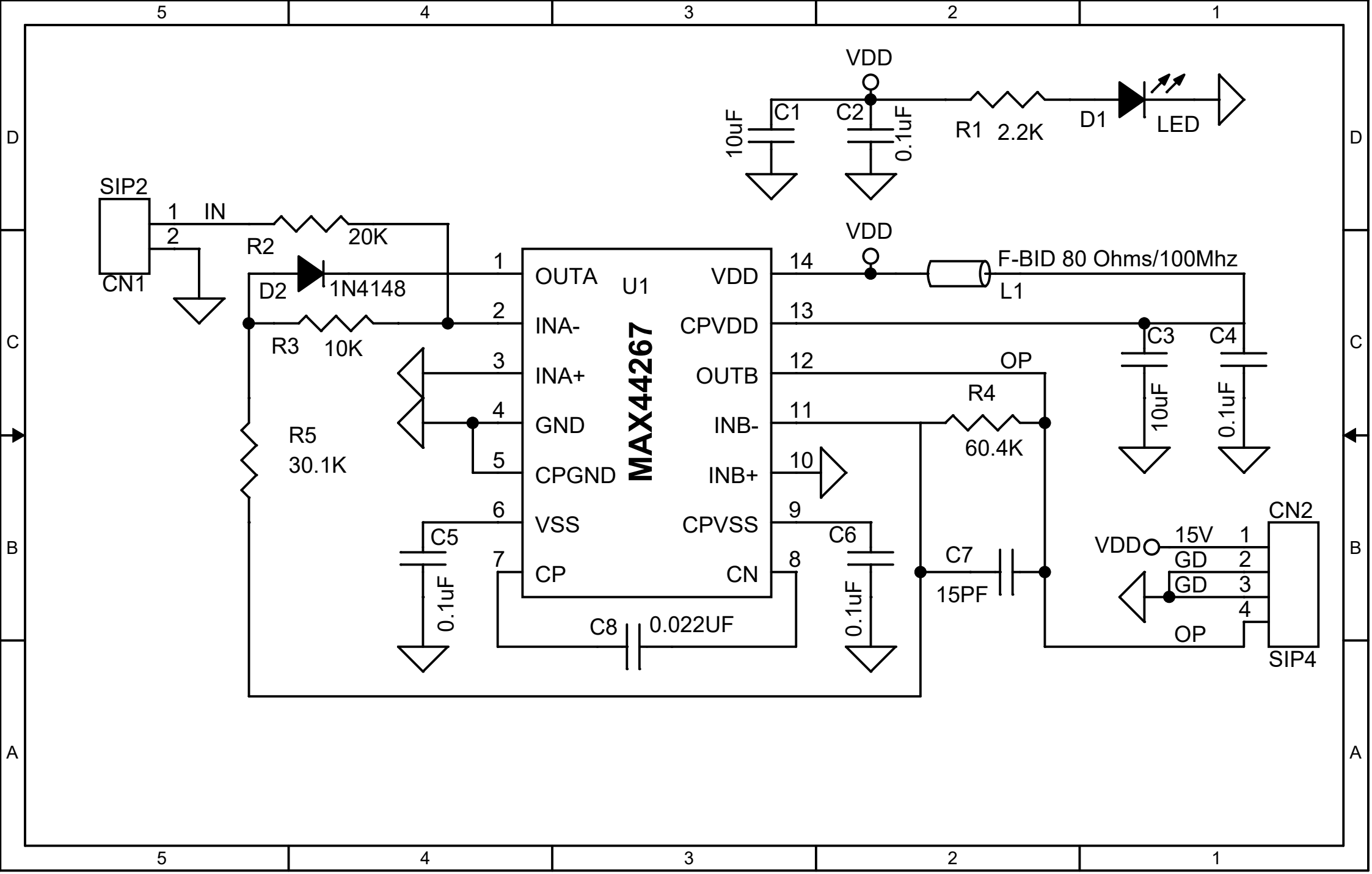
VDD
C1
10uF
C2
0.1uF
R1
2.2K
D1
LED
SIP2
1
IN
2
CN1
R2
20K
D2
1N4148
R3
10K
R5
30.1K
OUTA
U1
INA-
INA+
GND
CPGND
VSS
CP
MAX44267
VDD
CPVDD
OUTB
INB-
INB+
CPVSS
CN
VDD
F-BID 80 Ohms/100Mhz
L1
C3
C4
10uF
0.1uF
OP
R4
60.4K
C5
0.1uF
C6
0.1uF
C7
15PF
C8
0.022UF
VDD
15V
GD
GD
OP
CN2
SIP4