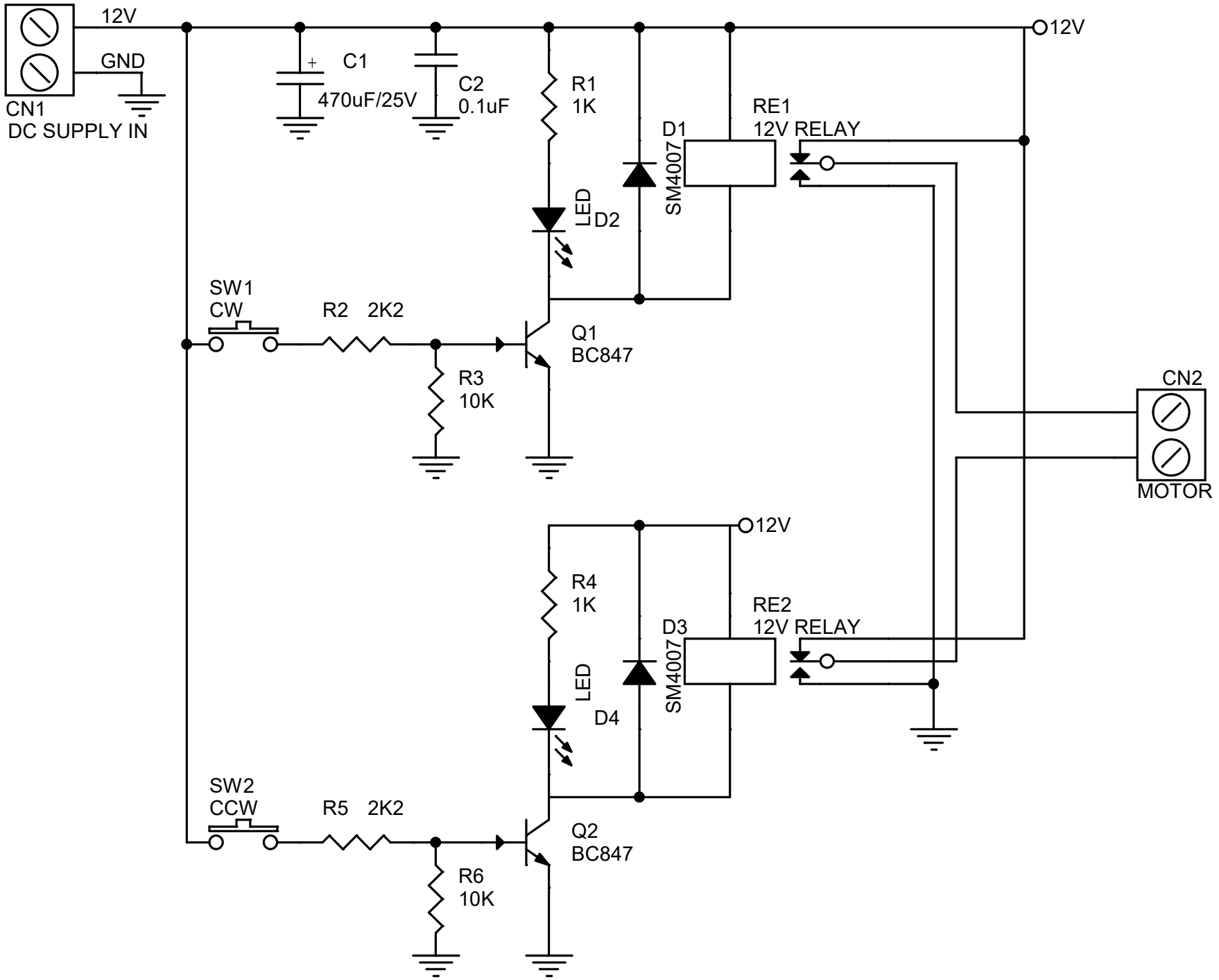
12V
GND
CN1
DC SUPPLY IN
C1
470uF/25V
C2
0.1uF
R1
1K
D1
SM4007
RE1
12V RELAY
12V
LED
D2
SW1
CW
R2 2K2
Q1
BC847
R3
10K
CN2
MOTOR
12V
R4
1K
D3
SM4007
RE2
12V RELAY
LED
D4
SW2
CCW
R5 2K2
Q2
BC847
R6
10K