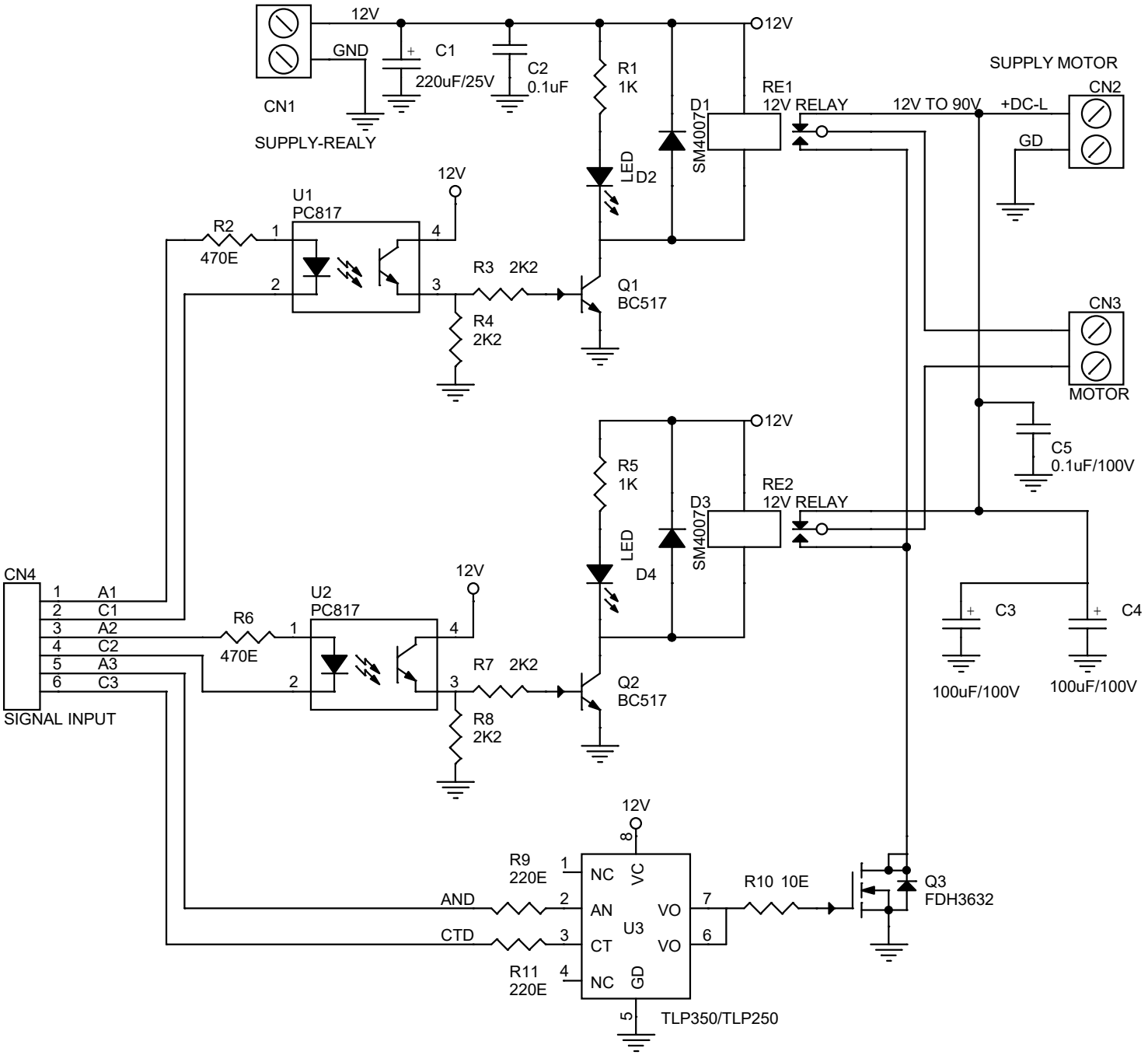
12V
GND
C1
220uF/25V
C2
0.1uF
CN1
SUPPLY-REALY
R1
1K
D1
SM4007
RE1
12V RELAY
12V TO 90V
+DC-L
GD
SUPPLY MOTOR
CN2
LED
D2
U1
PC817
R2
470E
R3 2K2
R4
2K2
Q1
BC517
CN3
MOTOR
C5
0.1uF/100V
R5
1K
D3
SM4007
RE2
12V RELAY
LED
D4
CN4
A1
C1
A2
C2
A3
C3
SIGNAL INPUT
U2
PC817
R6
470E
R7 2K2
R8
2K2
Q2
BC517
C3
C4
100uF/100V
100uF/100V
R9
220E
AND
CTD
R11
220E
NC
AN
CT
NC
VC
VO
VO
GD
U3
TLP350/TLP250
R10 10E
Q3
FDH3632