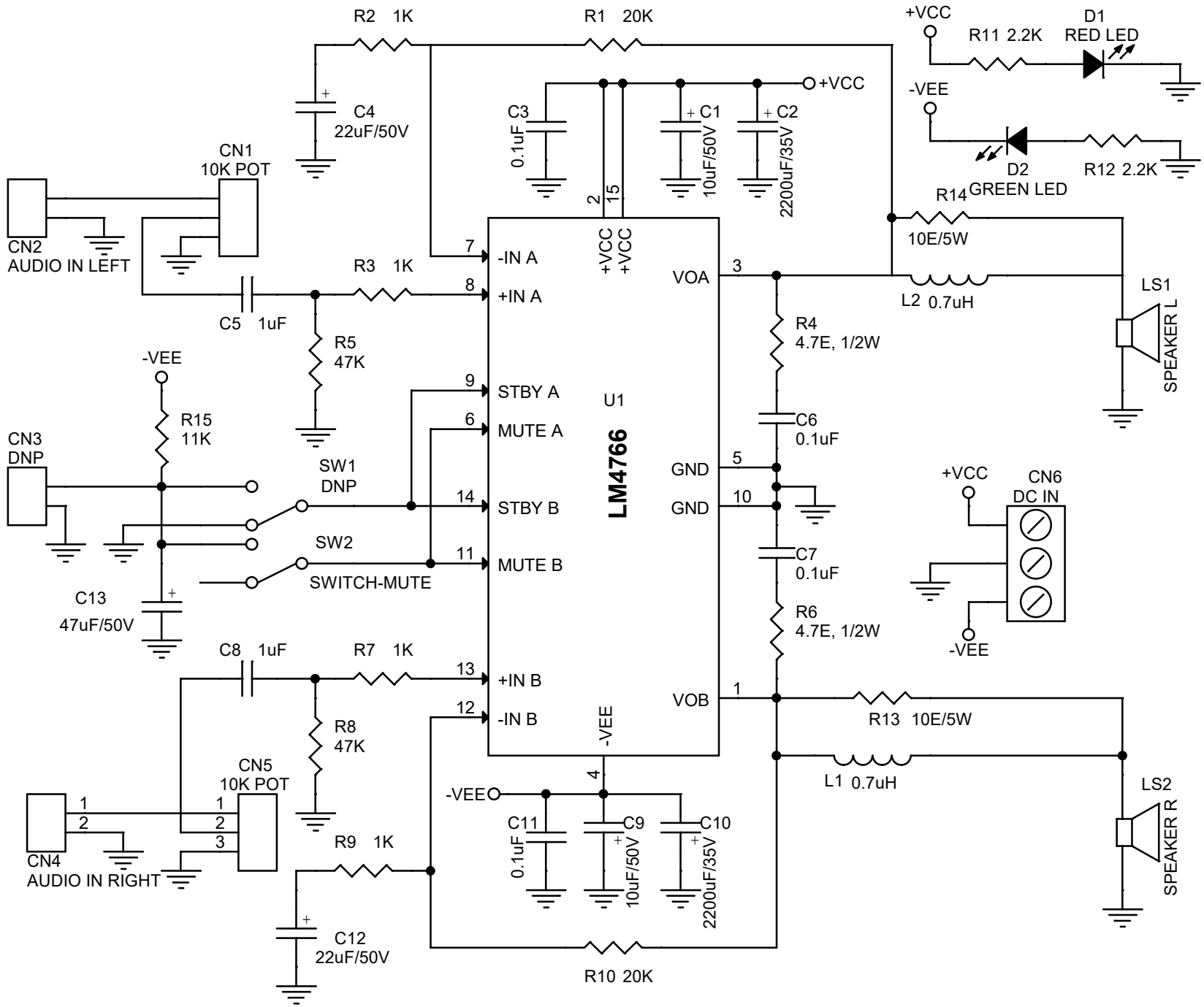
R2 1K
R1 20K
+VCC
R11 2.2K
D1
RED LED
-VEE
D2
GREEN LED
R12 2.2K
C4
22uF/50V
C3
0.1uF
C1
10uF/50V
C2
2200uF/35V
+VCC
CN1
10K POT
CN2
AUDIO IN LEFT
R14
10E/5W
-IN A
+IN A
STBY A
MUTE A
STBY B
MUTE B
+IN B
-IN B
VOA
GND
GND
VOB
U1
LM4766
R3 1K
C5 1uF
R5
47K
L2 0.7uH
LS1
SPEAKER L
R4
4.7E, 1/2W
C6
0.1uF
-VEE
R15
11K
CN3
DNP
SW1
DNP
SW2
SWITCH-MUTE
C13
47uF/50V
+VCC
CN6
DC IN
-VEE
C7
0.1uF
R6
4.7E, 1/2W
C8 1uF
R7 1K
R8
47K
R13 10E/5W
L1 0.7uH
LS2
SPEAKER R
CN5
10K POT
CN4
AUDIO IN RIGHT
-VEE
C11
0.1uF
C9
10uF/50V
C10
2200uF/35V
R9 1K
C12
22uF/50V
R10 20K