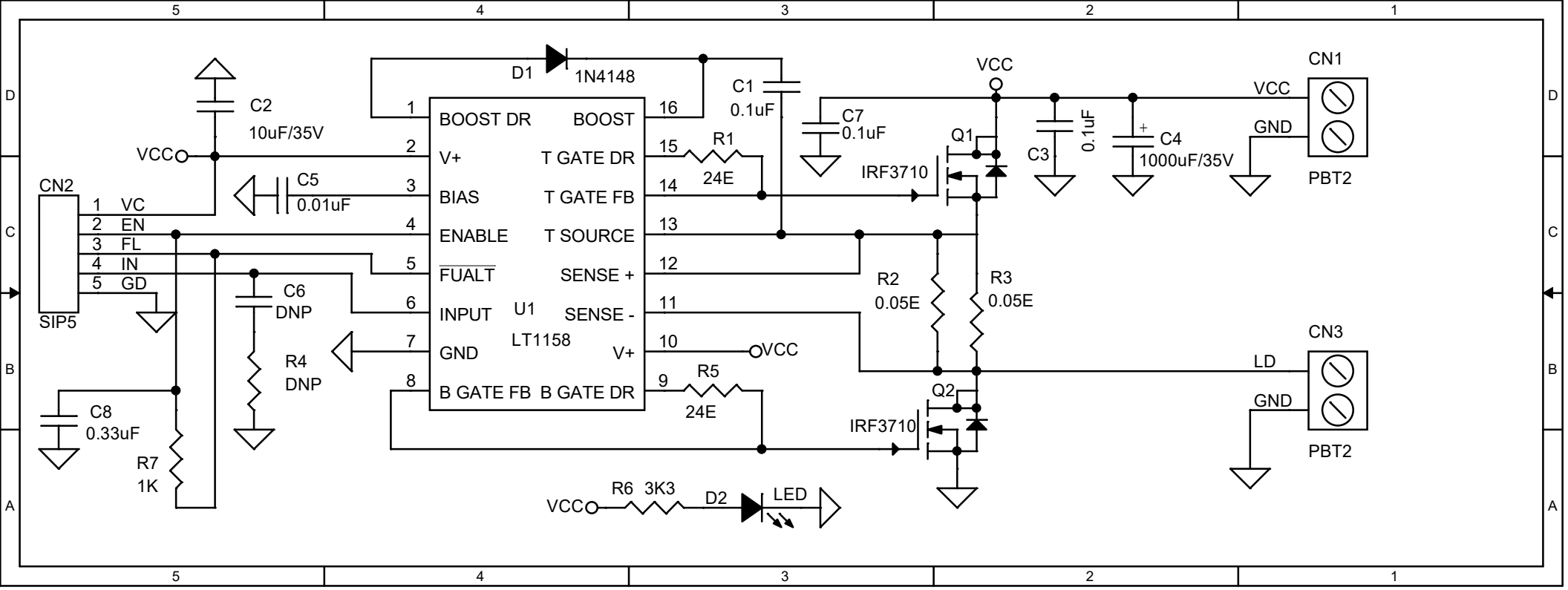
D1
1N4148
C1
0.1uF
VCC
CN1
VCC
GND
PBT2
C2
10uF/35V
VCC
C7
0.1uF
Q1
IRF3710
C3
0.1uF
C4
1000uF/35V
CN2
1 VC
2 EN
3 FL
4 IN
5 GD
SIP5
C5
0.01uF
BOOST DR
V+
BIAS
ENABLE
FUALT
INPUT
GND
B GATE FB
BOOST
T GATE DR
T GATE FB
T SOURCE
SENSE +
SENSE -
V+
B GATE DR
U1
LT1158
R1
24E
R2
0.05E
R3
0.05E
C6
DNP
R4
DNP
C8
0.33uF
R7
1K
R5
24E
Q2
IRF3710
CN3
LD
GND
PBT2
VCC
R6 3K3
D2
LED