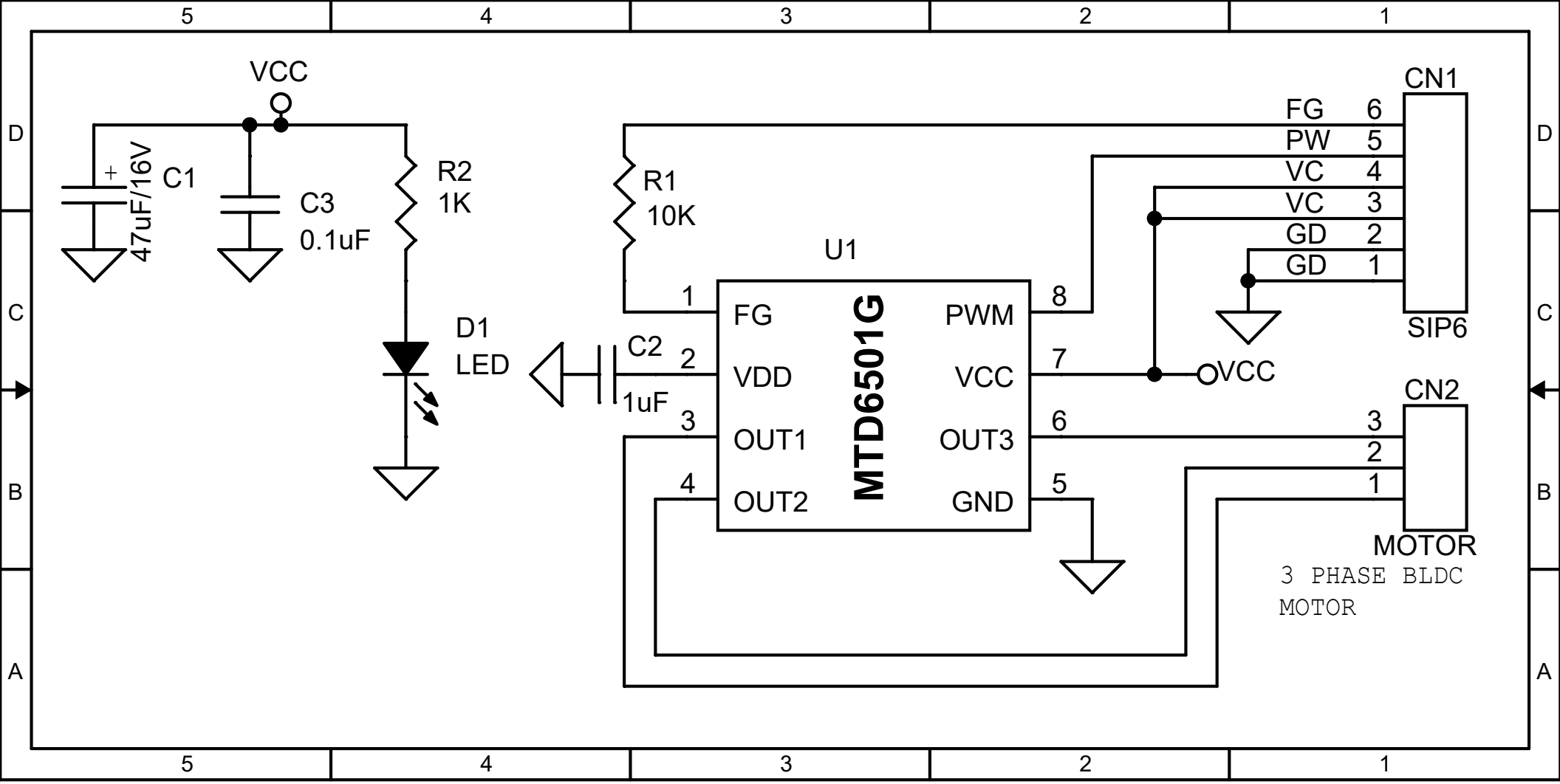
VCC
C1
47uF/16V
C3
0.1uF
R2
1K
D1
LED
R1
10K
C2
1uF
U1
MTD6501G
FG
VDD
OUT1
OUT2
PWM
VCC
OUT3
GND
CN1
FG 6
PW 5
VC 4
VC 3
GD 2
GD 1
SIP6
CN2
MOTOR
3 PHASE BLDC
MOTOR