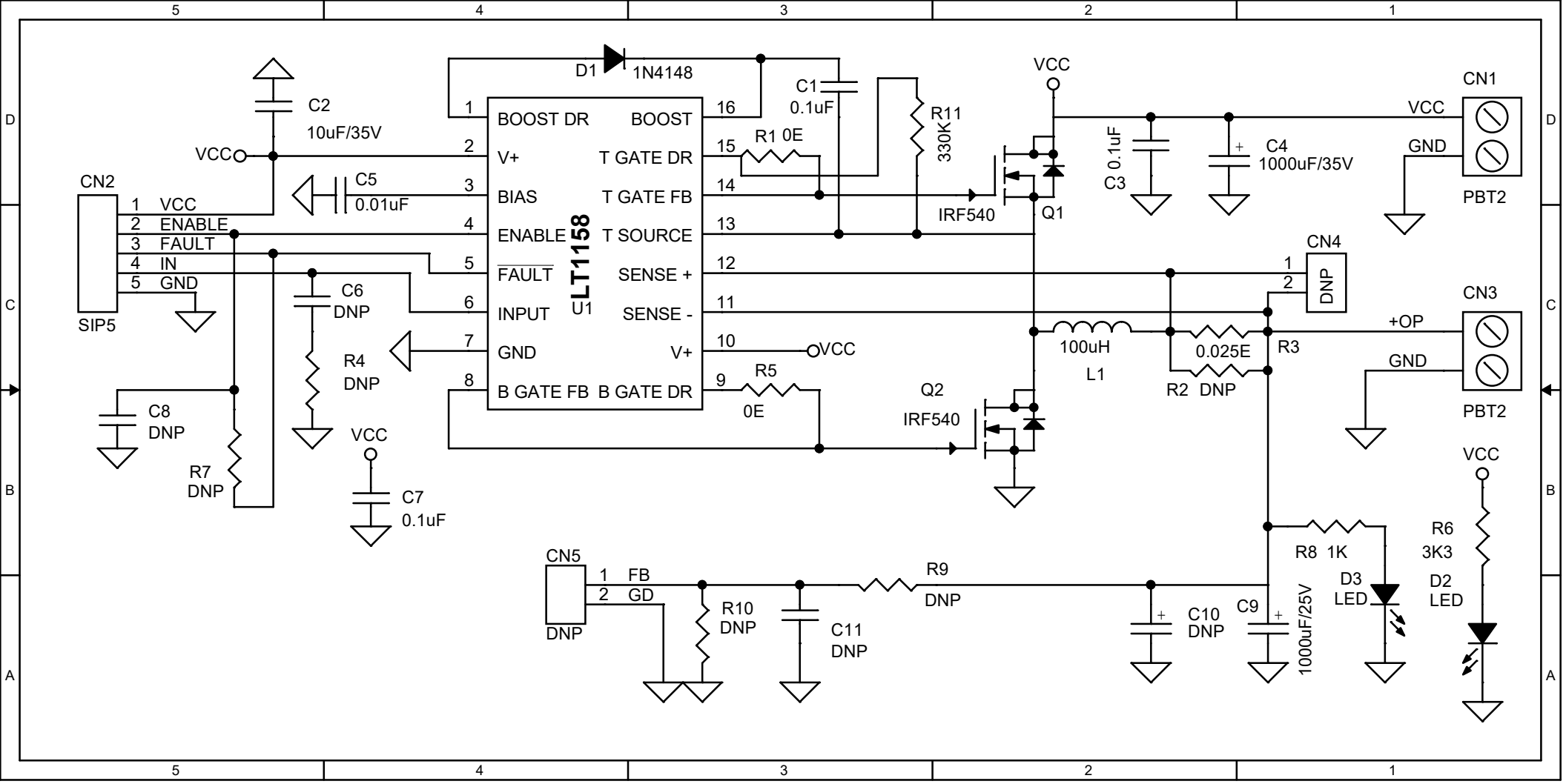
D1
1N4148
C2
10uF/35V
VCC
C5
0.01uF
CN2
1 VCC
2 ENABLE
3 FAULT
4 IN
5 GND
SIP5
C6
DNP
R4
DNP
C8
DNP
R7
DNP
VCC
C7
0.1uF
1 BOOST DR
2 V+
3 BIAS
4 ENABLE
5 FAULT
6 INPUT
7 GND
8 B GATE FB
LT1158
U1
16 BOOST
15 T GATE DR
14 T GATE FB
13 T SOURCE
12 SENSE +
11 SENSE -
10 V+
9 B GATE DR
C1
0.1uF
R1 0E
R5
0E
VCC
R11
330K
IRF540
Q1
Q2
IRF540
VCC
C3
0.1uF
C4
1000uF/35V
CN1
VCC
GND
PBT2
CN4
DNP
100uH
L1
0.025E
R2 DNP
R3
CN3
+OP
GND
PBT2
VCC
R6
3K3
D2
LED
R8 1K
D3
LED
C9
1000uF/25V
C10
DNP
CN5
1 FB
2 GD
DNP
R10
DNP
C11
DNP
R9
DNP