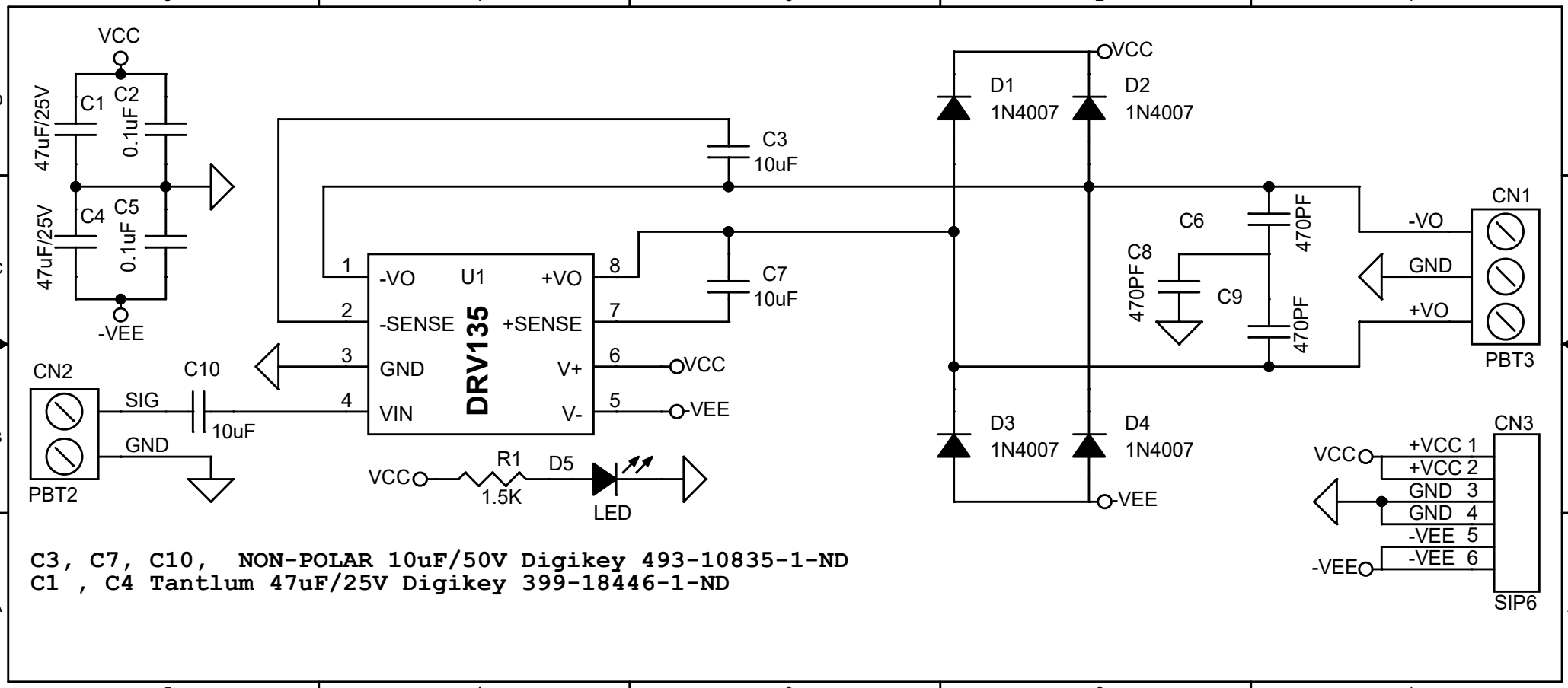

C3, C7, C10, NON-POLAR 10uF/50V Digikey 493-10835-1-ND
C1 , C4 Tantlum 47uF/25V Digikey 399-18446-1-ND